aspect arboriculture

LAND SOUTH OF CRAWLEY DOWN ROAD

FELBRIDGE (SA19)

Arboricultural Method Statement

February 2025
10948_AMS.001

COPYRIGHT

The copyright of this document remains with Aspect Arboriculture Ltd. The contents of this Document therefore must not be copied or reproduced in whole or in part for any purpose without the written consent of Aspect Arboriculture Ltd.

Aspect Arboriculture
Hardwick Business Park
Noral Way
Banbury
Oxfordshire
OX16 2AF

t 01295 276066
f 01295 265072

e info@aspect-arbor.com
w www.aspect-arbor.com

CONTENTS

1. Introduction **1**
1.1 Background 1
1.2 Scope 1
1.3 Limitations 2

2. Essential Work **3**
2.1 Tree Protection Plan 3
2.2 Tree Removals 3
2.3 Pruning Works 4
2.4 Protective Barriers 4
2.5 Works within RPAs 5
2.6 Supervised Excavation 6
2.7 Hard Surface Removal/Replacement 7
2.8 Above Soil Surfacing 8
2.9 Proposed Order of Works 9
2.10 Site Manager's Point of Contact for Arboricultural Input 9

3. Conclusions **10**

APPENDICES

Tree Protection Plan Appendix A
Works Auditing Schedule Appendix B
Tree Survey Schedule Appendix C
Tree Protection Barrier Specifications Appendix D

1 INTRODUCTION

1.1 Background

1.1.1 Aspect Arboriculture are instructed by Barratt David Wilson Homes to prepare an Arboricultural Method Statement (hereafter the AMS) to inform the introduction of consented residential development to the above site, allocated to receive residential development (as site SA19) within Mid-Sussex District Council's adopted Site Allocations DPD.

1.1.2 Planning permission for the development has been granted (ref. DM/23/0810), subject to conditions. One Condition attached to the consent relates to arboriculture: Condition 16 requires the production of an Arboricultural Method Statement and scheme of tree protection to demonstrate how trees which are to be retained will be safeguarded during the development (reproduced below).

1.1.3 Condition 16 reads:

The development hereby permitted shall not commence until such time as an Arboricultural Method Statement has been submitted to, and in approved in writing by, the Local Planning Authority. The Method Statement shall include, but not be restricted to, measures to put in place to protect retained trees and hedgerows during construction and details of how work within RPA's will be undertaken. The development shall only be implemented in accordance with the approved details.

1.1.4 This AMS, Works Auditing Schedule and Tree Protection Plan (TPP) has been prepared in direct response to this request, and specifies all safeguarding measures which must be adopted during the development to prevent harm from occurring to retained trees, including those which are under third party control and are positioned outside of the application area boundary.

1.1.5 It is our understanding that this work will be submitted to, and approved by, Mid-Sussex District Council (hereafter the Council), prior to the commencement of any construction works occurring on site. Once approved, the safeguarding measures and works should be implemented as specified and maintained to the Council's satisfaction until completion of the works.

1.1.6 The confident protection of retained trees will be achieved through the use of the appended Tree Protection Plans (appendix A) and Works Auditing Schedule (appendix B), alongside other supporting documents included within appendices C, and D.

1.2 Scope

1.2.1 This work relates to arboriculture therefore reliance should not be given to comments made in respect of other disciplines i.e. civil engineering or construction phasing, without first referencing an appropriate expert.

1.3 Limitations

1.3.1 This document has been prepared to inform safeguarding measures during development and should not be interpreted as a report on tree health and safety. Reasonable effort has been made to identify visible defects whilst carrying out the tree survey, however trees are prone to natural failure without warning; no guarantee can be made as to the absolute safety of any of the trees surveyed.

1.3.2 Aspect's opinion of tree condition and structural potential is valid for limited period of twelve months from the date of survey; undertaken during March 2023, and revisited during January 2025. Validity is assumed in the absence of inclement weather and no change to the trees' existing context. A copy of the site's tree survey information is provided within appendix C.

2 ESSENTIAL WORK

2.1 Tree Protection Plan

2.1.1 The Tree Protection Plan (TPP) provided in appendices A & B respectively, will be relied upon during the construction of the development. It should be read in conjunction with the entirety of this document. To prevent avoidable damage occurring to retained trees or erroneous tree loss, a scaled A1 copy of the TPP, accompanied by a copy of this document will be provided to the Site Manager. This will ensure they are able to:

- Clearly identify all retained trees;
- Identify the correct locations for tree protection barriers;
- Identify features of the site that must be prepared/installed under an arboricultural watching brief;
- Request attendance of the Project Arboriculturist on site for site monitoring and to provide advice in case of any emerging issues;
- Demonstrate compliance with the Council's consent for the development by safeguarding trees which are to be retained, and evidencing this by completing the Works Auditing Schedule (appendix C).

2.2 Tree Removals

2.2.1 Mid-Sussex District Council have confirmed the acceptability of the scheme in arboricultural terms. The necessary tree removals are detailed within table 1 overleaf. To confirm, the arboricultural effect of the scheme is identical to that accepted previously, with the exception of updates to the tree survey. To clarify, this amounts to the omission of Buddleia T156, that has been removed in the interim.

2.2.2 **Table 1:** Tree Removals by BS5837 Category.

Category A	Category B	Category C
None	T19, T104, T166 English Oak	T20, T21 Silver Birch
	T105 Sycamore	T64 Ash
	T165 Beech	T129, T145 Hawthorn
	G9+Δ	T140 Elder
		T155 Holly
		T156 Buddleia
		T157, T161 English Oak
		T162, T167 Beech
		T163 Sweet Chestnut
		T168 Japanese Maple
		T171 Box
		G5+Δ
		G17+Δ
		H1Δ Hawthorn & Holly
		H9 Western Red Cedar
		H11+

+ Denotes mixed species assemblage of three or more species – refer to Appendix B
Δ Denotes partial clearance

2.3 Pruning Works

2.3.1 The vast majority of the development is set back from the surrounding trees, as such, it will only be necessary to carry out pruning works to one Hazel (T16) and one group (G15) to facilitate the use of an adjacent section of footpath. In each case, the extent of pruning will amount to the shortening of secondary branches by c.1.5m max. and is achievable without affecting the trees' future potential, amenity value, or health and vitality.

2.3.2 Although not required to accommodate the development, it also recommended that dead branches are removed from the canopies of retained trees where oversailing rear gardens and areas of public use, to help mitigate the risk of future tree related hazards emerging.

2.3.3 Pruning works should be timed to avoid the main nesting season for birds between 1st March and 31st August. If scheduled within this period an ecologist must be present to advise on any necessary protective measures, and to confirm that tree works are not likely to cause disturbance to nesting birds.

2.3.4 Pruning work must be undertaken in accordance with section 7.3 (for removal of deadwood), and section 7.8 (for selective pruning) of BS3998:2010. A qualified and competent contractor should be employed to ensure that cuts are performed correctly and positioned so as to avoid future structural defects or physiological issues, facilitate growth and maintain aesthetic value.

2.4 Protective Barriers

2.4.1 Tree protection barriers are required to safeguard retained trees from damage during construction works. Protective barriers should be installed before any construction works are carried out. For the direct protection of retained trees, barriers should and consist of type A

within Figure 3 below. Where hedgerows are to be protected, or the development is set some distance from the boundaries, a secondary specification of barrier is appropriate (barrier type B); this specification omits diagonal bracing to the rear, and is formed of heras panels mounted on pinned feet; rigidity is ensured through the use of driven 100x100mm timber posts or scaffold poles every second panel.

2.4.2 The location for protective barriers has been informed by retained trees' canopy extents and root protection areas (RPAs). The location for default protective barriers is illustrated with a bold blue line and the secondary specification with a light blue dashed line within the TPPs.

2.4.3 **Figure 3.** Tree Protection Barriers.

2.4.4 The alignment of protective barriers will need to be adjusted to enable works within the peripheries of the RPAs. In each instance, the barrier is to be reinstated to the tree side of the feature; as illustrated with a dotted pink line within Appendix A.

2.5 Works within RPAs

2.5.1 The proposals seek the maximum degree of tree retention, subsequently, a number of features are proposed within the RPAs of retained trees. To confirm, these are unchanged from that previously consented by the Council, with the exception of T40, which is now category U and is recommended for removal, and tweaked alignment of a footpath within the site's northeastern corner. To confirm, all proposed features are deliverable

2.5.2 **Table 2:** RPA Incursions by Type and Extent.

	Supervised Excavation (m²/%)		Above Soil Surfacing (m²/%)		Hard Surface Replacement (m²/%)		Hard Surface Removal (m²/%)	
T5	-	-	6.2	6.1%	-	-	-	-
T7	-	-	3.6	3.2%	-	-	-	-
T30	-	-	16.4	3.0%	-	-	-	-
T36	-	-	44.0	16.2%	-	-	-	-
T37	-	-	6.1	3.7%	-	-	-	-
T38	-	-	25.9	10.2%	-	-	-	-

T41	3.0	1.2%	44.6	17.7%	-	-	-	-
T42	-	-	21.2	3.5%	-	-	-	-
T44	-	-	16.1	2.5%	-	-	-	-
T46	-	-	12.1	2.8%	-	-	-	-
T47	-	-	2.8	1.0%	-	-	-	-
T49	-	-	7.7	6.8%	-	-	-	-
T59	-	-	12.2	2.8%	-	-	-	-
T62	-	-	6.1	2.8%	-	-	-	-
T66	6.6	3.0%	-	-	-	-	-	-
T68	-	-	7.0	7.6%	-	-	-	-
T69	-	-	0.4	0.5%	-	-	-	-
T72	15.6	4.3%	15.3	4.2%	-	-	-	-
T76	2.4	1.5%	-	-	-	-	-	-
T79	6.3	1.5%	-	-	-	-	-	-
T80	-	-	28.8	6.4%	-	-	-	-
T81	1.4	0.6%	28.4	11.9%	-	-	-	-
T83	-	-	10.1	3.1%	-	-	-	-
T84	3.3	1.1%	21.3	7.4%	-	-	-	-
T87	-	-	0.5	0.8%	-	-	-	-
T88	-	-	8.7	6.4%	-	-	-	-
T98	-	-	72.1	12.6%	-	-	-	-
T108	35.8	5.1%	-	-	-	-	-	-
T109	3.9	0.9%	-	-	-	-	-	-
T122	-	-	11.2	5.0%	-	-	-	-
T123	-	-	12.8	6.7%	-	-	-	-
T124	8.3	2.5%	1.5	1.2%	-	-	-	-
T125	20.9	3.0%	23.8	3.4%	-	-	-	-
T126	5.0	2.4%	9.2	4.5%	-	-	-	-
T128	3.3	1.6%	13.0	6.3%	-	-	-	-
T131	-	-	4.9	2.8%	-	-	-	-
T133	3.9	0.8%	7.5	1.5%	-	-	-	-
T136	4.6	0.7%	-	-	-	-	-	-
T144	-	-	8.5	3.8%	-	-	-	-
T146	-	-	2.9	6.1%	-	-	-	-
T148	-	-	13.2	20.8%	-	-	-	-
T149	-	-	20.0	4.4%	-	-	-	-
T160	1.9	1.3%	-	-	-	-	-	-
T173	1.9	0.3%	13.4	2.1%	6.5	1.0%	34.4	5.3%
T174	2.8	8.2%	12.5	36.5%	-	-	-	-
T175	14.4	15.7%	25.5	27.8%	-	-	-	-
T176	11.2	5.0%	31.2	14.1%	-	-	-	-
G15	12.1	n/a	-	-	-	-	-	-
G21	-	-	5.7	n/a	1.4	n/a	-	-

2.6 Supervised Excavation

2.6.1 As a precautionary measure, to avoid detriment occurring to the affected trees, the extent of the excavation works closest to the trees must be carried out sensitively and under arboricultural supervision to a depth of c.600mm, adopting the principles within section 7.2 of BS5837:2012. The extent of excavation works which must be carried out under arboricultural supervision are illustrated within the TPP (appendix B) with an orange wash.

2.6.2 During supervised excavation works within the RPAs of retained trees, the following procedure will be adopted:

i. The breaking up and clearance of the existing soils must be undertaken under arboricultural supervision, using a low impact method of excavation, utilising hand tools, an air-spade, or a vacuum excavator.

ii. If necessary, roots that are less than 25mm diameter will be pruned back, preferably to a side branch, using sharp cutting tools in accordance with best practice i.e. using secateurs or pruning saw.

iii. During the works the protective bark of larger roots is not to be damaged, until the Project Arboriculturist has judged whether they can be retained or not.

iv. No roots over 25mm will be pruned without approval of the appointed Project Arboriculturist as they may be integral to tree health and stability. If it becomes necessary to prune roots over 25mm diameter to accommodate site features, the Project Arboriculturist will provide the Developer and the Council's Arboricultural Officer with appropriate recommendations for remedial action/ management.

v. Any exposed roots which can be retained will be covered in hessian or clean top soil to protect from dehydration and temperature flux. Hessian is to be removed prior to backfilling.

vi. Areas adjacent to roots that are to be filled with concrete will be lined with an impermeable membrane to prevent concrete leachate coming into contact with tree roots.

vii. Any use of an excavator to complete excavations will occur from outside the trees' RPA (which will be spray-marked on the ground in advance of the works taking place). A toothless bucket will be utilised at all times.

viii. A record of exposed roots will be made and accompanied by a photographic log.

ix. Should any issues be raised during the works then the Project Arboriculturist will inform the Developer and the Council's Arboricultural Officer, indicating the nature of the problem and recommendations for remedial action (if required).

x. Tree protection barriers are to be reinstated or repositioned on completion - whichever is within the interest of protecting RPAs. This will be determined by the Project Arboriculturist.

xi. Upon request, written confirmation of the works being undertaken to a satisfactory standard can be provided to the Developer and the Council's Arboricultural Officer by the Project Arboriculturist.

2.7 Hard Surface Removal/Replacement

2.7.1 The proposed western vehicular access will occupy a small proportion of the RPA of offsite Oak T173. The vast majority of the footprint of the occupied area is currently under hard surface, forming the driveway to no.123 Crawley Down Road, under which it is known that services are present.

2.7.2 Subsequently, the extent of works proposed are achievable without anticipating a detrimental effect on the tree's physiological or structural condition; whilst the access itself will incur excavation works to form the sub-base, the adjacent footway will be constructed by replacing the existing hard surfacing. The closest extent of the driveway will be removed and converted to soft landscaping, which, albeit only a small proportion of the entire RPA, will offer an improvement in terms of the underlying soil's permeability to moisture and gaseous exchange.

2.7.3 The works will incur the sensitive removal of the existing wearing course, with the underlying sub-base retained in-situ and undisturbed. The retained sub-base will be reused, overlain with the replacement wearing course, or clean topsoil where being converted to soft landscape.

2.8 Above Soil Surfacing

2.8.1 The proposed development also includes a number of sections of footpath, passing through the RPAs. Subject to founding the footpath sections on a CellWeb (or similar) sub-base, the installation is readily achievable without incurring root severance or associated detrimental effect.

2.8.2 Installation of CellWeb will adopt the following procedure:

Pre-commencement:

i. The Project Arboriculturist will brief the installation team on the importance of preventing soil compaction, oxygen/moisture restriction and the need for any excavation works within RPAs which may incur unnecessary root severance.

ii. Where protective barriers need to be temporarily repositioned to facilitate working room, areas of exposed RPAs will be protected by polyethylene Trackmats.

iii. The Project Arboriculturist will spray-mark the extent of affected RPAs on the ground prior to the commencement of works occurring for the benefit of machinery operators. A photograph of the spray-marked RPA limit and extent of affected area will be taken.

Installation:

iv. To prevent migration of the infill material and future loss of structural integrity, the area requiring no-dig surfacing must be covered with a porous geotextile underlay. This is to occur before installation of the cellular confinement system.

v. The cellular confinement system will be staked and expanded across the installation footprint area then cut to size.

vi. The edges are to be retained with non-invasive tanalised timber boards pinned with wooden stakes and an earth batter.

2.9 Proposed Order of Works

i. Pre-commencement site meeting between the Project Arboriculturist, Site Manager and the Council's Arboricultural Officer. Stages of arboricultural auditing/monitoring requirements will be identified/agreed.

ii. Tree protection barriers are to be installed prior to construction works commencing in the vicinity. Upon request, barrier positions can be set-out by the Project Arboriculturist, as detailed within this document.

iii. The Council's Arboricultural Officer shall be informed of the proposed commencement date as soon as possible, to allow the inspection of protection measures.

iv. The Site Manager will assume responsibility for arranging the attendance of the Project Arboriculturist to oversee the supervision of works within retained trees' RPAs, as detailed with the Works Auditing Schedule (appendix C).

2.10 Site Manager's Point of Contact for Arboricultural Input:

A. Mr James Bardey
Principal Arboricultural Consultant
Aspect Arboriculture
Telephone: 01295 276066
Email: James.Bardey@aspect-arbor.com

B. Mr Justin Hodges
Arboricultural Consultant
Aspect Arboriculture
Telephone: 01295 276066
Email: justin.hodges@aspect-arbor.com

3 CONCLUSIONS

3.1 This document has been prepared in response to Condition 16 of planning permission DM/23/0810, detailing tree protection measures necessary to construct the consented residential development. It has been informed by guidance provided in BS5837:2012.

3.2 Pursuant to the instruction, this document and its supporting work (Appendices A - D) identify the tree removals, pruning works, tree protection measures, and works within RPAs associated with the development that must be managed to facilitate the confident protection of retained trees during the works.

3.3 To ensure confident tree retention, siting of tree protection barriers and specified excavation works must be audited by the Project Arboriculturist; the outcome of these works will be reported to the Council's Arboricultural Officer on completion. These areas are specified within the Works Auditing Schedule (Appendix B).

3.4 It is Aspect's opinion that subject to strict adherence to this document, the consented development can be implemented without incurring harm to retained trees.

APPENDICES

APPENDIX A

TREE PROTECTION PLAN: (10948 TPP 01 Rev F)

1:2000 @ A3

0m 20m 40m 80m

KEY:

- Site Boundary
- Tree Numbers
- Tree Canopies
- Category 'U' Trees
- Category 'A' RPA
- Category 'B' RPA
- Category 'C' RPA
- Trees to be Removed
- Tree Protection Barrier
- Tree Protection Barrier (2nd Position)
- Manual Excavation
- Above Soil Surfacing
- Ground Boarding
- Hard Surface Replacement
- Hard Surface Removal

Note: Trees 4, 13, 18, 24, 51, 54, 56, 58, 60, 61, 85, 86, 91, 94, 97, 139, 142, Groups G1-G4, G12, G13, G16, Hedgerows H4, H6, H8 and parts of Groups G5-G11 have been plotted using measurements onsite in conjunction with aerial imagery. Their locations were not recorded on the topographical survey of the site.

Note: The RPA footprint for Trees 15, 19, 157, 160, 162, 166 & 169 have been displaced to allow for the effect of the adopted highway and existing building foundations. The surface area of the RPA has not been reduced.

Cited from Google Earth

REV	DATE	NOTE	Drawn	Chk'd
F	JAN '25	Survey Revisited & Updated to revised layout	JB	n/a
E	JUL '23	Updated to new layout	GW	JB
D	JUL '23	Updated to new layout	GW	JB
C	JUN '23	Updated to new layout	GW	JB
B	SEP '22	Updated to new layout	JB	JB
A	JUN '22	Updated to new layout	JB	JB

REVISIONS

aspect arboriculture

TITLE

Land South of Crawley Down Road, Felbridge
Tree Protection Plan

CLIENT

Barratt David Wilson Homes

SCALE	DATE	DRAWN
1:2000 @ A3	JUL 2023	GW

DRAWING NUMBER	REVISION
10948 TPP 01 Rev F (Overview)	

Based on: 240912 PLN-3-1101_Site Layout

Ordnance Survey, (c) Crown Copyright 2022. All rights reserved. Licence number 100022432

1:1000 @ A3

0m 10m 20m 40m

KEY:

- Site Boundary
- Tree Numbers
- Tree Canopies
- Category 'U' Trees
- Category 'A' RPA
- Category 'B' RPA
- Category 'C' RPA
- Trees to be Removed
- Tree Protection Barrier
- Tree Protection Barrier (2nd Position)
- Manual Excavation
- Above Soil Surfacing
- Ground Boarding
- Hard Surface Replacement
- Hard Surface Removal

Note: Trees 4, 13, 18, 24, 51, 54, 56, 58, 60, 61, 85, 86, 91, 94, 97, 139, 142, Groups G1-G4, G12, G13, G16, Hedgerows H4, H6, H8 and parts of Groups G5-G11 have been plotted using measurements onsite in conjunction with aerial imagery. Their locations were not recorded on the topographical survey of the site.

Note: The RPA footprint for Trees 15, 19, 157, 160, 162, 166 & 169 have been displaced to allow for the effect of the adopted highway and existing building foundations. The surface area of the RPA has not been reduced.

Cited from Google Earth

REV	DATE	NOTE	Drawn	Chk'd
F	JAN '25	Survey Revisited & Updated to revised layout	JB	n/a
E	JUL '23	Updated to new layout	GW	JB
D	JUL '23	Updated to new layout	GW	JB
C	JUN '23	Updated to new layout	GW	JB
B	SEP '22	Updated to new layout	JB	JB
A	JUN '22	Updated to new layout	JB	JB

REVISIONS

Secondary Reduced Barrier Specification

Heras panels supported with pinned rubber feet and driven 100x100mm timber posts on every second panel.

Default Barrier Specification, cited BS 5837:2012

Key
1 Standard scaffold poles
2 Heavy gauge 2m tall galvanized tube and welded mesh infill panels
3 Panels secured to uprights and cross-members with wire ties
4 Ground level
5 Uprights driven into the ground until secure (minimum depth 0.6m)
6 Standard scaffold clamps

aspect arboriculture

TITLE

Land South of Crawley Down Road, Felbridge
Tree Protection Plan

CLIENT

Barratt David Wilson Homes

SCALE	DATE	DRAWN
1:1000 @ A3	JUL 2023	GW

DRAWING NUMBER	REVISION
10948 TPP 01 Rev F (1/4)	

Based on: 240912 PLN-3-1101_Site Layout

1:1000 @ A3

0m 10m 20m 40m

KEY:

- Site Boundary
- Tree Numbers
- Tree Canopies
- Category 'U' Trees
- Category 'A' RPA
- Category 'B' RPA
- Category 'C' RPA
- Trees to be Removed
- Tree Protection Barrier
- Tree Protection Barrier (2nd Position)
- Manual Excavation
- Above Soil Surfacing
- Ground Boarding
- Hard Surface Replacement
- Hard Surface Removal

Note: Trees 4, 13, 18, 24, 51, 54, 56, 58, 60, 61, 85, 86, 91, 94, 97, 139, 142, Groups G1-G4, G12, G13, G16, Hedgerows H4, H6, H8 and parts of Groups G5-G11 have been plotted using measurements onsite in conjunction with aerial imagery. Their locations were not recorded on the topographical survey of the site.

Note: The RPA footprint for Trees 15, 19, 157, 160, 162, 166 & 169 have been displaced to allow for the effect of the adopted highway and existing building foundations. The surface area of the RPA has not been reduced.

Cited from Google Earth

REV	DATE	NOTE	Drawn	Chk'd
F	JAN '25	Survey Revisited & Updated to revised layout	JB	n/a
E	JUL '23	Updated to new layout	GW	JB
D	JUL '23	Updated to new layout	GW	JB
C	JUN '23	Updated to new layout	GW	JB
B	SEP '22	Updated to new layout	JB	JB
A	JUN '22	Updated to new layout	JB	JB

REVISIONS

aspect arboriculture

TITLE

Land South of Crawley Down Road, Felbridge
Tree Protection Plan

CLIENT

Barratt David Wilson Homes

SCALE	DATE	DRAWN
1:1000 @ A3	JUL 2023	GW

DRAWING NUMBER	REVISION
10948 TPP 01 Rev F (2/4)	

Based on: 240912 PLN-3-1101_Site Layout

T160 & G15: Footprint of proposed footpath within RPA to be excavated under arboricultural supervision.

T173: Hard surface replacement and removal within RPA to be carried out under arboricultural supervision.

T5 & T7: Proposed footpath within RPA to be constructed above soil.

T98: Proposed driveway and footpath within RPA to be constructed above soil.

T41-T42, T44, T46, T47 & T49: Proposed footpath, parking spaces and shared driveway within RPA to be constructed above soil.

T41: Footprint of proposed road and sub-station within RPA to be excavated under arboricultural supervision.

T62, T81, T83, T84, T87 & T88: Proposed footpath within RPA to be constructed above soil.

T81 & T84: Footprint of proposed building and road within RPA to be excavated under arboricultural supervision.

T66, T72, T76 & T79: Footprint of proposed road within RPA to be excavated under arboricultural supervision.

T72: Proposed footpath to be constructed above soil within RPA.

Bowling Green

Pavilion

Tennis Courts

WARREN CLOSE

OAK FARM PLACE

Recreation

LEAP for details refer to landscape drawings

CENTRAL OPEN SPACE for details refer to landscape drawings

DETENTION BASIN

[98] - Failed - Jan 25

[77] - Removed - Jan 25

156 - Removed - Jan 25

1:1000 @ A3

0m 10m 20m 40m

KEY:

- Site Boundary
- Tree Numbers
- Tree Canopies
- Category 'U' Trees
- Category 'A' RPA
- Category 'B' RPA
- Category 'C' RPA
- Trees to be Removed
- Tree Protection Barrier
- Tree Protection Barrier (2nd Position)
- Manual Excavation
- Above Soil Surfacing
- Ground Boarding
- Hard Surface Replacement
- Hard Surface Removal

Note: Trees 4, 13, 18, 24, 51, 54, 56, 58, 60, 61, 85, 86, 91, 94, 97, 139, 142, Groups G1-G4, G12, G13, G16, Hedgerows H4, H6, H8 and parts of Groups G5-G11 have been plotted using measurements onsite in conjunction with aerial imagery. Their locations were not recorded on the topographical survey of the site.

Note: The RPA footprint for Trees 15, 19, 157, 160, 162, 166 & 169 have been displaced to allow for the effect of the adopted highway and existing building foundations. The surface area of the RPA has not been reduced.

Cited from Google Earth

REV	DATE	NOTE	Drawn	Chk'd
F	JAN '25	Survey Revisited & Updated to revised layout	JB	n/a
E	JUL '23	Updated to new layout	GW	JB
D	JUL '23	Updated to new layout	GW	JB
C	JUN '23	Updated to new layout	GW	JB
B	SEP '22	Updated to new layout	JB	JB
A	JUN '22	Updated to new layout	JB	JB

REVISIONS

Secondary Reduced Barrier Specification

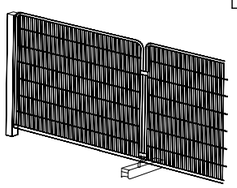

Heras panels supported with pinned rubber feet and driven 100x100mm timber posts on every second panel.

Default Barrier Specification, cited BS 5837:2012

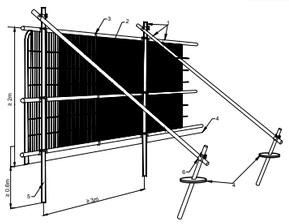

Key

1 Standard scaffold poles
2 Heavy gauge 2m tall galvanized tube and welded mesh infill panels
3 Panels secured to uprights and cross-members with wire ties
4 Ground level
5 Uprights driven into the ground until secure (minimum depth 0.6m)
6 Standard scaffold clamps

aspect arboriculture

TITLE

Land South of Crawley Down Road, Felbridge
Tree Protection Plan

CLIENT

Barratt David Wilson Homes

SCALE	DATE	DRAWN
1:1000 @ A3	JUL 2023	GW

DRAWING NUMBER	REVISION
10948 TPP 01 Rev F (3/4)	

Based on: 240912 PLN-3-1101_Site Layout

Secondary Reduced Barrier Specification

Heras panels supported with pinned rubber feet and driven 100x100mm timber posts on every second panel.

Default Barrier Specification, cited BS 5837:2012

Key
1 Standard scaffold poles
2 Heavy gauge 2m tall galvanized tube and welded mesh infill panels
3 Panels secured to uprights and cross-members with wire ties
4 Ground level
5 Uprights driven into the ground until secure (minimum depth 0.6m)
6 Standard scaffold clamps

1:1000 @ A3

0m 10m 20m 40m

KEY:

- Site Boundary
- Tree Numbers
- Tree Canopies
- Category 'U' Trees
- Category 'A' RPA
- Category 'B' RPA
- Category 'C' RPA
- Trees to be Removed
- Tree Protection Barrier
- Tree Protection Barrier (2nd Position)
- Manual Excavation
- Above Soil Surfacing
- Ground Boarding
- Hard Surface Replacement
- Hard Surface Removal

Note: Trees 4, 13, 18, 24, 51, 54, 56, 58, 60, 61, 85, 86, 91, 94, 97, 139, 142, Groups G1-G4, G12, G13, G16, Hedgerows H4, H6, H8 and parts of Groups G5-G11 have been plotted using measurements onsite in conjunction with aerial imagery. Their locations were not recorded on the topographical survey of the site.

Note: The RPA footprint for Trees 15, 19, 157, 160, 162, 166 & 169 have been displaced to allow for the effect of the adopted highway and existing building foundations. The surface area of the RPA has not been reduced.

Cited from Google Earth

REV	DATE	NOTE	Drawn	Chk'd
F	JAN '25	Survey Revisited & Updated to revised layout	JB	n/a
E	JUL '23	Updated to new layout	GW	JB
D	JUL '23	Updated to new layout	GW	JB
C	JUN '23	Updated to new layout	GW	JB
B	SEP '22	Updated to new layout	JB	JB
A	JUN '22	Updated to new layout	JB	JB

REVISIONS

aspect arboriculture

TITLE

Land South of Crawley Down Road, Felbridge
Tree Protection Plan

CLIENT

Barratt David Wilson Homes

SCALE	DATE	DRAWN
1:1000 @ A3	JUL 2023	GW

DRAWING NUMBER	REVISION
10948 TPP 01 Rev F (4/4)	

Based on: 240912 PLN-3-1101_Site Layout

APPENDIX B

WORKS AUDITING SCHEDULE

Works Auditing Schedule

Works Requiring Auditing	Tree No.	Date Undertaken	Date Reported to LPA
1. Pre-commencement meeting identifying tree removals, tree protection barrier locations and safeguarding measures, as specified within 10948_AMS.001 and illustrated on drawing nos. 10948_TPP.01 Rev F.	As drawn		
2: Inspection of tree protection barriers and prior to commencement of development works by Project Arboriculturist.	As drawn		
3: Supervised excavation works.	T41 T66 T72 T76 T79 T81 T84 T108 T109 T124 T125 T126 T128 T133 T136 T160 T173 T174 T175 T176 G15		
4: Hard Surface Removal/Replacement	T173 G21		

This schedule will be completed as evidence that works have been undertaken as per the approved methodology.

5: Above Soil Surfacing	T5 T7 T30 T36 T37 T38 T41 T42 T44 T47 T49 T59 T62 T68 T69 T72 T80 T81 T83 T84 T87 T88 T98 T122 T123 T124 T125 T126 T128 T131 T133 T144 T146 T148 T149 T173 T174 T175 T176 G21		

This schedule will be completed as evidence that works have been undertaken as per the approved methodology.

APPENDIX C

TREE SURVEY SCHEDULE (10948 TS 01 Rev B)

aspect arboriculture

BS 5837:2012 Tree Schedule: Land South of Crawley Down Road, Felbridge

10948 TS 01 Rev B

aspect arboriculture

BS5837:2012 Tree Survey: Explanation of Survey Criteria

*Area around tree deemed to contain sufficient roots and rooting volume to maintain the tree's viability, and where the protection of roots and soil structure is a priority. *The RPA has been manipulated to allow for various site features, i.e. roads, structures or changes in levels. Please refer to the Tree Constraints Plan for these changes.*

e.g.: young, semi-mature, early-mature, mature or over-mature

Sequential reference number cited on all aspect drawing.

Category prefix A-C denotes arboricultural quality, decreasing from A (high) to C (low); Subcategories 1, 2 and 3 highlight associated arboricultural (1), landscape (2) and ecological (3) qualities.

Height and Crown spread measured to the nearest half meter; # denotes where this is estimated.

Category U trees are those in such a condition that they cannot be realistically retained as living trees in the current context for the long term.

Tree Number	Common Species Name	Trunk Diameter (mm)	Height (m)	Crown Spread (m)					Crown Clearance (m)	Life Stage	Physiological Condition	Structural Condition	Comments	BS5837 Category	RPA Radius (m)
				N	E	S	W	radial							

Measured to the nearest 10mm; # denotes estimated diameter where access is not possible.

e.g.: above-average, average, below average or dead

General observations, i.e. defects, preliminary management recommendation, presence of pests/disease, perceived significance.

Height of first significant branch and/or canopy

e.g.: good, indifferent, poor, or hazardous

Colour band key:

Category A
Category B
Category C
Category U

The following survey should not be interpreted as a report on tree health and safety. Aspect's opinion of tree condition and structural potential is valid for a limited period of 12 months from the date of inspection. Validity is assumed in the absence of inclement weather and no change to the trees existing setting.

Land South of Crawley Down Road, Felbridge

Tree Number	Common Species Name	Trunk Diameter (mm)	Height (m)	Crown Spread (m) N	E	S	W	Radial	First Significant Branch (m)	Crown Clearance (m)	Life Stage	Physiological Condition	Structural Condition	Comments	BS5837 Category	RPA Radius (m)
1	English Oak	780 #	6m					1	0	0	Mature	Dead	Poor	Standing deadwood Inaccessible, offsite within neighbouring third party land, unable to thoroughly inspect	U	N/A
2	English Oak	1000 #	19.5m	10 #	12.25	13.5	9 #		5.75	1.5	Mature	Below Average	Hazardous	Significant longitudinal wound on main stem from c.2.5m - 13.5m with split from c.12m Hazardous structural condition, unsuitable for retention Inaccessible, offsite within neighbouring third party land, unable to thoroughly inspect	U	N/A
3	Hawthorn	3* 125 2* 90 #	7m	3 #	4	3.75	3.5#		1	1	Semi Mature	Average	Indifferent	Established scrub Inaccessible, offsite within neighbouring third party land, unable to thoroughly inspect Low arboricultural quality	C12	3
4	English Oak	750 #	18m	9 #	10 #	9.75	11 #		6.5 #	4.5	Mature	Average	Indifferent	Large partially occluded pruning wound to south at c.5m Average internal deadwood Minor epicormic growth Structure appears typical for species within current context Visually prominent individual Inaccessible, offsite within neighbouring third party land, unable to thoroughly inspect Good example of species at maturity	A12	9
5	Silver Birch	465	14m	5.5 #	7.75	7.5	5 #		2.25	4	Mature	Average	Indifferent	Slight lean to east Average small diameter internal deadwood Structure appears typical for species within current context Moderate example of species at maturity	B12	5.7
6	English Oak	290	10m	3 #	4.5	4.5	5.5 #		1.5	2	Semi Mature	Average	Indifferent	Impact wound to south at c.1.5m Average small diameter internal deadwood Low arboricultural quality	C12	3.6
7	Crack Willow	500 #	15m	6 #	6	4	3 #		3	5.25	Early Mature	Below Average	Poor	Above average internal deadwood and dieback Multi stemmed from c.3m Inaccessible, offsite within neighbouring third party land, unable to thoroughly inspect Reduced future potential	C1	6
8	Norway Maple	400 #	14.5m	7.5 #	6.5	6.75	7 #		3	4	Early Mature	Average	Indifferent	Minor internal deadwood Well balanced radial crown Structure appears typical for species within current context Inaccessible, offsite within neighbouring third party land, unable to thoroughly inspect Moderate example of species whilst maturing	B12	4.8
9	Norway Maple	440 #	12m	7 #	7.25	6.75	5 #		2.5	4.25	Early Mature	Below Average	Poor	Above average internal deadwood and dieback Inaccessible, offsite within neighbouring third party land, unable to thoroughly inspect Reduced future potential	C12	5.4

Tree Number	Common Species Name	Trunk Diameter (mm)	Height (m)	Crown Spread (m)					First Significant Branch (m)	Crown Clearance (m)	Life Stage	Physiological Condition	Structural Condition	Comments	BS5837 Category	RPA Radius (m)
				N	E	S	W	Radial								
10	English Oak	520 #	13.5m	5.5	6.25	6	4 #		1.75	2.5	Early Mature	Below Average	Poor	Etiolated form with several tight unions in lower scaffold structure Slightly sparse crown at time of survey Inaccessible, offsite within neighbouring third party land, unable to thoroughly inspect Unremarkable example of species	C1	6.3
11	Crack Willow	660 #	7m					3	n/a	0	Early Mature	Average	Poor	Recently topped at c.2.5m; canopy formed of young regenerative growth	C12	7.8
12	English Oak	250	8.5m	3	3	4 #	4 #		1.5	1.5	Semi Mature	Average	Indifferent	Appears self-set Average small diameter internal deadwood Low arboricultural quality	C12	3
13	Copper Beech	330 #	13m	7 #	5.5 #	5	6 #		3 #	5.75	Early Mature	Average	Indifferent	Inaccessible, offsite within neighbouring domestic garden, unable to thoroughly inspect Previous lower limb removals to crown raise Minor internal deadwood Cohesive with companions Prominent within views from adjacent dwellings	B2	3.9
14	Copper Beech	400 #	13.5m	7 #	6 #	5 #	6.75		2 #	2	Early Mature	Average	Indifferent	Inaccessible, offsite within neighbouring domestic garden, unable to thoroughly inspect Previous lower limb removals to crown raise Minor internal deadwood Cohesive with companions Prominent within views from adjacent dwellings	B2	4.8
15	Beech	480 #	14m	5 #	6 #	7 #	8		2.5 #	1.5	Early Mature	Average	Indifferent	Inaccessible, offsite within neighbouring domestic garden, unable to thoroughly inspect Previous lower limb removals to crown raise Minor internal deadwood Cohesive with companions Prominent within views from adjacent dwellings	B2	5.7
16	Hazel	8* 90	4.5m	4 #	2.75	3.5	3 #		1.5	1.5	Semi Mature	Average	Indifferent	Multi stemmed from ground level Low arboricultural quality	C12	3
17	Silver Birch	380 #	13.5m	5 #	5.25	5.75	6 #		2	4.25	Early Mature	Average	Indifferent	Inaccessible, offsite within neighbouring domestic garden, unable to thoroughly inspect Structure appears typical for species within current context Moderate example of species whilst maturing	B12	4.5
18	Red Horse Chestnut	450 #	10m	6 #	5 #	7	5 #		4 #	4	Early Mature	Average	Indifferent	Clad and obscured by Ivy Cohesive with T17 Average internal deadwood Inaccessible, offsite within neighbouring domestic garden, unable to thoroughly inspect Moderate example of species whilst maturing	B1	5.4

Tree Number	Common Species Name	Trunk Diameter (mm)	Height (m)	Crown Spread (m) N	E	S	W	Radial	First Significant Branch (m)	Crown Clearance (m)	Life Stage	Physiological Condition	Structural Condition	Comments	BS5837 Category	RPA Radius (m)
19	English Oak	790	14.5m	10	8.25	8.75	9.5		3.75	2.5	Mature	Average	Indifferent	Unbalanced scaffold structure and crown, biased to west Previous lower limb reductions to eastern aspect Average internal deadwood Moderate example of species at maturity	B12	9.6
20	Silver Birch	325 245	11m	5.25	4	5.5	3.25		3.75	4.5	Early Mature	Average	Poor	Bifurcates from ground level Minor internal deadwood Previous lower limb removals to crown raise Low arboricultural quality	C12	4.8
21	Silver Birch	300 280	12.5m	5.5	5.5	4.75	4.25		3.75	2	Early Mature	Average	Poor	Bifurcates from ground level Minor internal deadwood Previous lower limb removals to crown raise Low arboricultural quality	C12	4.8
22	English Oak	770 #	22m	9 #	10 #	10	10 #		8	9.25	Mature	Below Average	Indifferent	Several lower limb removals to crown lift Sparse crown for species at time of survey Recent excavation works within RPA to north Average internal deadwood Cohesive with T23 Visually prominent individual Inaccessible, offsite within neighbouring domestic garden, unable to thoroughly inspect Moderate example of species at maturity	B12	9.3
23	English Oak													Offsite: Removed as of January 2025		
24	Ash	600 350 #	14m	8 #	9 #	6 #	7.5		3 #	4.5	Early Mature	Below Average	Poor	Dieback to upper crown Above average internal deadwood and epicormic growth Inaccessible, offsite within neighbouring third party land, unable to thoroughly inspect Lower stem obscured by dense understory Reduced future potential	C1	8.4
25	English Oak	475 #	14.5m	4.5 #	7 #	8.5 #	6.75		5.25	5	Early Mature	Below Average	Indifferent	Partially clad and obscured by Ivy Unbalanced scaffold structure and crown, biased to south Average internal deadwood Inaccessible, offsite within neighbouring third party land, unable to thoroughly inspect Lower stem obscured by dense understory Moderate value as component of wider collective	B2	5.7
26	English Oak	1000 #	23m	9 #	13 #	12.25	8.25		3.5	4	Mature	Average	Indifferent	Dominant component of collection lining eastern boundary Previous unsympathetic reduction to lower scaffold limb orientated to west at c.2.5m Minor dieback in upper crown to west Average internal deadwood with large diameter in lower crown Inaccessible, offsite within neighbouring third party land, unable to thoroughly inspect Lower stem obscured by dense understory Visually prominent individual	A2	12

Tree Number	Common Species Name	Trunk Diameter (mm)	Height (m)	Crown Spread (m) N	E	S	W	Radial	First Significant Branch (m)	Crown Clearance (m)	Life Stage	Physiological Condition	Structural Condition	Comments	BS5837 Category	RPA Radius (m)
27	English Oak	1200 #	19m	13 #	6 #	10.5	12.25		4 #	3.25	Mature	Average	Hazardous	Several major structural failures on eastern aspect from c.3m - 8m Multiple limbs over extended to west Hazardous structural condition, unsuitable for retention	U	N/A
28	English Oak	260	9m	4.5 #	2 #	2.25	6.75		2.5	3.25	Semi Mature	Below Average	Indifferent	Heavily supressed by T29 Minor internal deadwood Low arboricultural quality	C12	3
29	English Oak	590 #	17m	9 #	8 #	9.5	8.75		3 #	4.5	Early Mature	Average	Indifferent	Partially clad and obscured by Ivy Unsympathetic pruning to lower crown to west Structure appears typical for species within current context Inaccessible, offsite within neighbouring third party land, unable to thoroughly inspect Lower stem obscured by dense understory Moderate example of species whilst maturing	B12	7.2
30	English Oak	1100 #	23m	10 #	12 #	13.25	11.25		3.5 #	3	Mature	Below Average	Indifferent	Dominant component of collection lining eastern boundary Minor dieback to tips within upper crown Average internal deadwood with large diameter in lower crown Inaccessible, offsite within neighbouring third party land, unable to thoroughly inspect Lower stem obscured by dense understory Visually prominent individual	A2	13.2
31	Rowan	290 #	10m	4.75	1	1	7.75		1.5	4.5	Early Mature	Average	Poor	Component of G5 Unbalanced scaffold structure, biased to west Inaccessible due to dense understory and close proximity to water course, unable to thoroughly inspect	C12	3.6
32	Alder	475 #	16.5m	10.25	6 #	5 #	6 #		5.25	4.25	Early Mature	Average	Indifferent	Component of G6 Biased to north Cohesive with companions Average internal deadwood Inaccessible due to dense understory and close proximity to water course, unable to thoroughly inspect	B2	5.7
33	Alder	390	11m	7.75	3 #	0	3 #		5	5	Early Mature	Average	Poor	Component of G6 Stem leans to north east Average internal deadwood Cohesive with companions	B2	4.8
34	Alder	835	17.5m	8.5	11 #	10 #	9 #		3.25	3	Mature	Average	Indifferent	Dominant component of G6 Average internal deadwood Structure appears typical for species within current context Visually prominent individual Good example of species at maturity	A12	9.9

Tree Number	Common Species Name	Trunk Diameter (mm)	Height (m)	Crown Spread (m)				Radial	First Significant Branch (m)	Crown Clearance (m)	Life Stage	Physiological Condition	Structural Condition	Comments	BS5837 Category	RPA Radius (m)
				N	E	S	W									
35	Silver Birch	575 525	16m	8.75	6.5	7.75	9.25		4	3.75	Mature	Average	Indifferent	Co-dominant stems from c.1m, union included with lobed reaction growth Hanging deadwood to south at c.4.25m Pockets of decay within old pruning wounds on lower stem Average internal deadwood Moderate example of species at maturity	B12	9.3
36	English Oak	780	15m	4	6.5	11.5	11		3	3.75	Mature	Average	Poor	Large wound to east from c.3m - 6m with senescent *Ganoderma* fruiting body at c.5.5m Unbalanced scaffold structure and crown, biased to south west Average internal deadwood Unremarkable example of species	C1	9.3
37	English Oak	590	14m	9.25	9	4.75	8.5		5	2.25	Early Mature	Below Average	Indifferent	Partially clad and obscured by Ivy, unable to thoroughly inspect Slightly sparse upper crown at time of survey Above average internal deadwood Moderate value as component of internal field boundary collection	B2	7.2
38	Ash	750	22m	5	9.5	9	7.25		3.25	4	Mature	Below Average	Indifferent	Unsympathetic reduction to lower limb orientated to south at c.4.5m Slightly sparse crown for species Above average minor epicormic growth Average internal deadwood Moderate example of species at maturity	B12	9
39	English Oak	490	13.5m	5.75	4.5	5.75	7.25		3.25	3.25	Early Mature	Below Average	Indifferent	Supressed by T38 & T40 Slightly sparse crown at time of survey Unremarkable example of species	C12	6
40	Ash	790	21m	9.75	6.25	5	9.75		3.75	5.25	Mature	Below Average	Poor	Forks into 3no. leaders at c.3.5m, unions appear tight Storm damage throughout upper crown Sparse crown for species Above average internal deadwood and epicormic growth Extensive basal decay to southeast Entering a state of decline, reduced future potential	U	n/a
41	English Oak	1005	20.5m	7.5	12.5	11	7.75		4	2.25	Mature	Average	Indifferent	Maintains single leader for majority of height Mutually suppressed and cohesive with companion shelter Previous lower limb removals to crown lift Average internal deadwood Minor epicormic growth Visually prominent individual Good example of species at maturity	A12	12

Tree Number	Common Species Name	Trunk Diameter (mm)	Height (m)	Crown Spread (m) N	E	S	W	Radial	First Significant Branch (m)	Crown Clearance (m)	Life Stage	Physiological Condition	Structural Condition	Comments	BS5837 Category	RPA Radius (m)
42	English Oak	1150 #	18.5m	11.25	10.25	11.25	9.5		3.75	3	Mature	Below Average	Indifferent	Dominant component of internal field boundary collection Stem inaccessible due to dense understory, unable to thoroughly inspect Slightly sparse crown for species Large tear out wound to west at c.5m Previous reduction to lower scaffold limb to east at c.5.75m Several partially occluded pruning wounds on lower stem Average internal deadwood Cohesive with companions	A2	13.8
43	English Oak	520	19m	6	7.25	6.25	7.75		4	3.75	Early Mature	Average	Indifferent	Average internal deadwood Maintains single leader for majority of height Slightly supressed by T44 Moderate example of species whilst maturing	B12	6.3
44	English Oak	1210	29m	11.5	12.25	12.25	11.5		3.5	3.5	Mature	Average	Poor	Principal component of internal field boundary collection Well balanced radial crown Tight primary union at c.4m Average internal deadwood Minor epicormic growth Visually prominent individual Considered to be of high arboricultural quality	A12	14.4
45	English Oak	615 570	24m	9	8.5	6.25	9		4.5	4	Mature	Below Average	Poor	Included unions within scaffold structure to south at c.4.5m & east at c.6.5m Above average minor epicormic growth Average internal deadwood Slightly sparse crown Cohesive with companions Moderate example of species at maturity	B12	10.2
46	English Oak	975	28m	10.75	8.75	10.25	10.75		5	4.25	Mature	Average	Indifferent	Minor epicormic growth on scaffold structure Large partially occluded pruning wound with pocket of decay to west at c.1.75m Average internal deadwood Structure typical for species within current context Visually prominent individual Mutually supressed and cohesive with companion shelter Good example of species at maturity	A12	11.7
47	English Oak	595 515	17m	8.75	9.5	7.25	7.5		6	3	Mature	Average	Poor	Bifurcates at c.1.5m, union tight and included Cavities between buttress flares at base Average internal deadwood with large diameter in lower crown Slightly supressed by T46 Moderate example of species at maturity	B12	9.3
48	Silver Birch	410									Early Mature	Below Average	Hazardous	Failed at c.1.5m as of January 2025 Hung up within canopy of T49	U	N/A

Tree Number	Common Species Name	Trunk Diameter (mm)	Height (m)	Crown Spread (m)					First Significant Branch (m)	Crown Clearance (m)	Life Stage	Physiological Condition	Structural Condition	Comments	BS5837 Category	RPA Radius (m)
				N	E	S	W	Radial								
49	Silver Birch	500 #	14.5m	5	5.25	6.75	7.5		4.5	3.25	Mature	Below Average	Indifferent	Average internal deadwood Above average minor epicormic growth Mutually supressed and cohesive with companion shelter Considered to be of moderate arboricultural value	B12	6
50	Alder	800 250 #	16.5m	8.75	7.5 #	9.5 #	7		4.25	5.75	Mature	Below Average	Indifferent	Component of G6 Sub-dominant stem from ground level to north west Minor dieback to tips Average internal deadwood Inaccessible due to dense understory, unable to thoroughly inspect Moderate example of species at maturity	B12	10.2
51	Alder	390 #	12m					3	6	6	Early Mature	Dead	Hazardous	Standing deadwood Snapped at c.6m	U	N/A
52	English Oak	790 #	16m	6.75	5 #	7 #	4.5		5.75	9.5	Mature	Dead	Hazardous	Standing deadwood	U	N/A
53	Alder	2* 450 380 360 #	15m	5.5	5 #	7.5 #	5.25		4 #	5.25	Mature	Below Average	Hazardous	Significant cavity at base from previous co-dominant stem failure Hazardous structural condition, anticipate imminent failure	U	N/A
54	English Oak	740 #	12m	3	6.75	6 #	5 #		5	7.5	Mature	Below Average	Indifferent	Clad and obscured by Ivy, unable to thoroughly inspect Sparse crown for species Dieback to tips Above average internal deadwood and epicormic growth Inaccessible due to dense understory Reduced future potential	C1	9
55	Hawthorn	235	5m	1.75	3.25	2	2.25		3	3	Early Mature	Below Average	Indifferent	Sparse crown for species Above average internal deadwood Reduced future potential	C12	2.7
56	English Oak	585	16m	5	10.25	5.25	0		10	7.25	Early Mature	Below Average	Indifferent	Leans to north east Slightly sparse crown at time of survey Minor burrs on lower stem Average internal deadwood Mutually supressed and cohesive with companion shelter Moderate value as component of internal field boundary collection	B2	6.9

Tree Number	Common Species Name	Trunk Diameter (mm)	Height (m)	Crown Spread (m)				Radial	First Significant Branch (m)	Crown Clearance (m)	Life Stage	Physiological Condition	Structural Condition	Comments	BS5837 Category	RPA Radius (m)
				N	E	S	W									
57	English Oak	860 oi	18m	9.25	11.25	7.75	3.5		3.5	4	Mature	Average	Indifferent	Partially clad and obscured by Ivy, unable to thoroughly inspect Biased to east Exposed and scalped surface roots to west Average internal deadwood Minor epicormic growth on scaffold structure Mutually supressed and cohesive with companion shelter Moderate example of species at maturity	B12	10.2
58	English Oak	490 #	15m	2.75	5.75	6.5	8 #		6.25	8	Early Mature	Below Average	Indifferent	Large dead scaffold limb to north west at c.5.5m Sparse crown for species Above average internal deadwood and epicormic growth Clad and obscured by Ivy Inaccessible due to dense understory, unable to thoroughly inspect Reduced future potential	C1	6
59	English Oak	975	21.5m	11	9.75	6.75	6.5		4	4	Mature	Average	Indifferent	Established within field boundary hedgerow Exposed and scalped surface roots Average internal deadwood Minor epicormic growth Structure typical for species within current context Visually prominent individual Good example of species at maturity	A12	11.7
60	English Oak	480 oi	16.5m	5	5.75	6.25	4.25		6	6.75	Early Mature	Average	Indifferent	Average internal deadwood Minor epicormic growth Clad and obscured by Ivy, unable to thoroughly inspect Mutually supressed and cohesive with companion shelter Moderate value as component of internal field boundary collection	B2	5.7
61	English Oak	420 #	8.5m	5	8.25	4.75	3.75		6	4	Early Mature	Below Average	Poor	Heavily supressed by dominant companion shelter Inaccessible due to dense understory Unremarkable example of species	C12	5.1
62	Ash	570 405 oi	18m	5.75	10	10.75	6.75		8.75	4.25	Mature	Below Average	Poor	Co-dominant stems from ground level, union appears tight Partially clad and obscured by Ivy, unable to thoroughly inspect Slightly sparse crown for species Average internal deadwood Mutually supressed and cohesive with companion shelter Moderate value as component of internal field boundary collection	B2	8.4
63	Ash	2* 400 #	19m	7.75	12.25	10.25	5.5		6	4.25	Mature	Below Average	Hazardous	Bifurcates from ground level, union appears to be separating Hazardous structural condition, unsuitable for retention	U	N/A

Tree Number	Common Species Name	Trunk Diameter (mm)	Height (m)	Crown Spread (m) N	E	S	W	Radial	First Significant Branch (m)	Crown Clearance (m)	Life Stage	Physiological Condition	Structural Condition	Comments	BS5837 Category	RPA Radius (m)
64	Ash	515 oi	18.5m	2.75	5.25	4.5	5		11.25	13 #	Early Mature	Below Average	Indifferent	Etiolated form Clad and obscured by Ivy, unable to thoroughly inspect Sparse crown for species Above average epicormic growth Reduced future potential	C1	6.3
65	English Oak	660	12m	2.25	3	3	5.75		3.5	4.25	Early Mature	Below Average	Hazardous	In a state of terminal decline, unlikely to offer a long term future contribution	U	N/A
66	English Oak	690	19m	6.25	5.5 #	6.25	7.5		5	5.75	Early Mature	Average	Poor	Bifurcates at c.4m, union appears tight Average internal deadwood with large diameter in lower crown Minor epicormic growth on scaffold structure Cohesive with companions Moderate example of species whilst maturing	B12	8.4
67	Holly	290 #	13.5m	3.75	6.75	4	4.25		1	1	Early Mature	Below Average	Indifferent	Understory component Showing signs of low vitality Low arboricultural quality	C1	3.6
68	English Oak	445	19m	6.5 #	1	4.5	8		5	5	Early Mature	Average	Indifferent	Previous lower limb removals to crown lift Average internal deadwood Biased to west Mutually supressed and cohesive with companion shelter Moderate value as component of internal field boundary collection	B2	5.4
69	English Oak	415	18.m	6.5 #	4	7.75	5.75		4.25	5	Early Mature	Average	Indifferent	Average small diameter internal deadwood Structure typical for species within current context Mutually supressed and cohesive with companion shelter Moderate value as component of internal field boundary collection	B2	5.1
70	English Oak	460	16.5m	5 #	2 #	7	6.25		3.25	5	Early Mature	Average	Indifferent	Partially clad and obscured by Ivy, unable to thoroughly inspect Average internal deadwood Minor epicormic growth on scaffold structure Mutually supressed and cohesive with companion shelter Moderate value as component of internal field boundary collection	B2	5.4
71	English Oak	490 #	19.5m	4 #	5 #	5.75	8.25		7.25	4.5	Early Mature	Average	Indifferent	Maintains single leader for majority of height Average internal deadwood Inaccessible due to dense understory, unable to thoroughly inspect Partially clad and obscured by Ivy Mutually supressed and cohesive with companion shelter Moderate example of species whilst maturing	B12	6

Tree Number	Common Species Name	Trunk Diameter (mm)	Height (m)	Crown Spread (m) N	E	S	W	Radial	First Significant Branch (m)	Crown Clearance (m)	Life Stage	Physiological Condition	Structural Condition	Comments	BS5837 Category	RPA Radius (m)
72	English Oak	900	20.5m	7.5 #	10	10.5	12		5	4	Mature	Average	Indifferent	Stand out component of internal field boundary collection Average internal deadwood of occasional large diameter Minor epicormic growth on scaffold structure Visually prominent individual Mutually supressed and cohesive with companion shelter Good example of species at maturity	A12	10.8
73	English Oak	295	10.5m	1	0	4	7.75		5	5.25	Semi Mature	Below Average	Indifferent	Supressed by dominant companion shelter, biased to west Above average internal deadwood Unremarkable example of species	C12	3.6
74	English Oak													Failed: Collapsed as of January 2025		
75	English Oak	300	11m	1.75	3	3.5	5.25		3	3.5	Early Mature	Below Average	Indifferent	Large partially occluded wound to west at c.3m Supressed by dominant companion shelter Low arboricultural quality	C12	3.6
76	English Oak	560 235	18.5m	4 #	5 #	7.5	5.75		6.25	5.25	Early Mature	Below Average	Indifferent	Sub-dominant stem from ground level orientated to north Slightly sparse crown for species Above average minor epicormic growth Average internal deadwood Mutually supressed and cohesive with companion shelter Moderate value as component of internal field boundary collection	B2	7.2
77	English Oak	300 #	11m	2 #	3	2.5	2		8	8.75	Early Mature	Below Average	Poor	In a state of terminal decline, unlikely to offer a long term future contribution	U	N/A
78	English Oak	340 #	9.5m	3	2	4	8.5		4.25	4.5	Early Mature	Below Average	Indifferent	Squat canopy form Leans to west Sparse crown for species Inaccessible due to dense understory, unable to thoroughly inspect Low arboricultural quality	C12	4.2
79	English Oak	975 #	20.5m	9.75	12	6.75	10		4	4.25	Mature	Below Average	Indifferent	Stand out component of internal field boundary collection Average internal deadwood of occasional large diameter Slight lean to east Minor epicormic growth on lower stem Visually prominent individual Mutually supressed and cohesive with companion shelter Inaccessible due to dense understory, unable to thoroughly inspect Good example of species at maturity	A2	11.7

Tree Number	Common Species Name	Trunk Diameter (mm)	Height (m)	Crown Spread (m)					First Significant Branch (m)	Crown Clearance (m)	Life Stage	Physiological Condition	Structural Condition	Comments	BS5837 Category	RPA Radius (m)
				N	E	S	W	Radial								
80	English Oak	1000 #	18m	10.25	11 #	12.75	10.75		4.25	5.5	Mature	Average	Indifferent	Dominant component of internal field boundary collection Maintains single leader for majority of height Average internal deadwood with large diameter in lower crown Minor epicormic growth Mutually supressed and cohesive with companion shelter Good example of species at maturity	A12	12
81	English Oak	735	19m	0	6	9.5	8.25		6	4	Mature	Below Average	Indifferent	Unbalanced scaffold structure and crown, biased to south and west Previous lower limb removals to crown lift Slightly sparse crown for species Average internal deadwood of occasional large diameter Moderate example of species at maturity	B12	8.7
82	English Oak	380	12m	0	0	7.25	7.75		3	5.5	Early Mature	Average	Poor	Heavily supressed by T83 Considered to be of low arboricultural quality	C12	4.5
83	English Oak	620 590 oi	20m	5.5	4.25	10	8		6	9 #	Mature	Below Average	Indifferent	Slightly sparse crown for species Partially clad and obscured by Ivy, unable to thoroughly inspect Above average minor epicormic growth Average internal deadwood with frequent large diameter Mutually supressed and cohesive with companion shelter Moderate value as component of internal field boundary collection	B2	10.2
84	English Oak	800 #	23m	9 #	7 #	13	12.75		2	5	Mature	Average	Indifferent	Dominant component of internal field boundary collection Stem inaccessible due to dense understory Average internal deadwood of large diameter in lower crown Structure appears typical for species within current context Mutually supressed and cohesive with companion shelter Considered to be of high arboricultural value	A12	9.6
85	English Oak	675 #	13m	3 #	8 #	6	5		3	3	Early Mature	Below Average	Indifferent	Inaccessible, offsite within neighbouring third party land, unable to thoroughly inspect Clad and obscured by Ivy Sparse crown for species Above average internal deadwood and epicormic growth Low arboricultural quality	C1	8.1
86	English Oak	1150 #	24m	12 #	13 #	5	7.75		3.5 #	3.5	Mature	Average	Indifferent	Inaccessible, offsite within neighbouring third party land, unable to thoroughly inspect Partially clad and obscured by Ivy Biased to north Average internal deadwood with occasional large diameter Minor epicormic growth Visually prominent individual	A2	13.8

Tree Number	Common Species Name	Trunk Diameter (mm)	Height (m)	Crown Spread (m)					First Significant Branch (m)	Crown Clearance (m)	Life Stage	Physiological Condition	Structural Condition	Comments	BS5837 Category	RPA Radius (m)
				N	E	S	W	Radial								
87	English Oak	375	18.5m	5.25	4	3.75	4.25		5.75	5.25	Early Mature	Average	Indifferent	Maintains single leader for majority of height Previous lower limb removals to crown lift Average internal deadwood Mutually supressed and cohesive with companion shelter Moderate value as component of internal field boundary collection	B2	4.5
88	English Oak	545	19m	4	5.25	7.25	8.25		6.5	6	Early Mature	Average	Indifferent	Previous lower limb removals to crown lift Average internal deadwood Maintains single leader for majority of height Mutually supressed and cohesive with companion shelter Moderate example of species whilst maturing	B12	6.6
89	English Oak	540	19m	4.25	5.25	7.25	5.75		7	4	Early Mature	Average	Indifferent	Partially clad and obscured by dead Ivy, unable to thoroughly inspect Above average minor epicormic growth Average internal deadwood Mutually supressed and cohesive with companion shelter Moderate example of species whilst maturing	B12	6.6
90	English Oak	1265	18m	10	8.25	5.75	8		5.75	5.25	Mature	Dead	Hazardous	Standing deadwood	U	N/A
91	Sycamore	255	11m	5.25	4.75	3	1.75		1.5	1.5	Semi Mature	Average	Indifferent	Appears self-set Supressed by dominant companion shelter Low arboricultural value	C12	3
92	English Oak	440	17.5m	3.75	4.25	5.5	3		6.75	7	Early Mature	Average	Indifferent	Average small diameter internal deadwood Etiolated form Maintains single leader for majority of height Minor epicormic growth Mutually supressed and cohesive with companion shelter Moderate value as component of internal field boundary collection	B2	5.4
93	Wild Service	200	8.5m	4.25	3.25	2	2 #		3	1	Semi Mature	Average	Indifferent	Minor internal deadwood Structure typical for species within current context Considered to be of moderate arboricultural value	B1	2.4
94	English Oak	560 #	16m	8.5 #	7 #	3.25	6.25		5	5.75	Early Mature	Below Average	Indifferent	Inaccessible, offsite within neighbouring third party land, unable to thoroughly inspect Sparse crown for species Above average internal deadwood and epicormic growth Reduced future potential	C1	6.6

Tree Number	Common Species Name	Trunk Diameter (mm)	Height (m)	Crown Spread (m) N	E	S	W	Radial	First Significant Branch (m)	Crown Clearance (m)	Life Stage	Physiological Condition	Structural Condition	Comments	BS5837 Category	RPA Radius (m)
95	Sycamore	380 #	12m	3.5	4	2.25	2 #		3.5	4	Early Mature	Average	Indifferent	Heavily clad and obscured by Ivy, unable to thoroughly inspect Minor internal deadwood Biased to east Unremarkable example of species	C12	4.5
96	Ash													Failed: Collapsed as of January 2025		
97	English Oak	880 #	15.5m	10 #	11 #	9.25	7		5	5	Mature	Below Average	Indifferent	Minor dieback to tips Average internal deadwood Slightly sparse upper crown Heavily clad and obscured by Ivy Inaccessible, offsite within neighbouring third party land, unable to thoroughly inspect Prominent boundary feature Moderate example of species at maturity	B12	10.5
98	English Oak	1115	20.5m	12 #	11 #	9	10.25		5.25	5	Mature	Below Average	Indifferent	Dominant component of internal field boundary collection Fibre buckling to west at c.1.5m and east at c.0.25m Cavities between buttress flares Large burr to south at c.4m Average internal deadwood of frequent large diameter Slightly sparse upper crown Well balanced radial crown Visually prominent individual	A2	13.5
99	Sycamore	210	10.5m	2.5	3.25	2 #	1 #		4	4.25	Semi Mature	Average	Indifferent	Appears self-set Impact wound to east at c.1.5m Considered to be of low arboricultural value	C12	2.4
100	Sycamore	235 120	11m	3.5	2.5	2 #	2 #		4	4	Semi Mature	Average	Indifferent	Appears self-set Impact wound to east at c.2.5m Considered to be of low arboricultural value	C12	3.3
101	Sycamore	410 oi	12m	5 #	4.75	6	6		4.25	4	Early Mature	Average	Indifferent	Partially clad and obscured by Ivy, unable to thoroughly inspect Minor internal deadwood Structure appears typical for species within current context Moderate example of species whilst maturing	B1	4.8
102	Norway Spruce	400 #	14m					4.5	3 #	2 #	Early Mature	Average	Indifferent	Maintains single leader for majority of height Well balanced radial crown Previous lower limb removals to crown raise Structure appears typical for species within current context Inaccessible, offsite within neighbouring domestic garden, unable to thoroughly inspect Considered to be of moderate arboricultural value	B1	4.8

Tree Number	Common Species Name	Trunk Diameter (mm)	Height (m)	Crown Spread (m)					First Significant Branch (m)	Crown Clearance (m)	Life Stage	Physiological Condition	Structural Condition	Comments	BS5837 Category	RPA Radius (m)
				N	E	S	W	Radial								
103	Cherry	450	11m	5 #	6 #	7	7 #		3 #	5	Mature	Average	Indifferent	Partially clad and obscured by Ivy Average internal deadwood Inaccessible, offsite within neighbouring domestic garden, unable to thoroughly inspect Individually of limited merit, conferred moderate value as component of wider collective only	B2	5.4
104	English Oak	1100	18.5m	11.5 #	9.75	12.75	9 #		3.5	4.75	Mature	Below Average	indifferent	Established within field boundary Maintains single leader for majority of height Well balanced radial crown Above average internal deadwood of frequent large diameter Above average minor epicormic growth Sparse crown for species Moderate example of species at maturity	B12	13.2
105	Sycamore	2* 270 #	11.5m	5 #	4 #	4.75	6 #		4	5	Early Mature	Average	Poor	Minor internal deadwood Partially clad and obscured by Ivy Inaccessible, offsite within neighbouring domestic garden, unable to thoroughly inspect Individually of low significance, moderate value as component of wider collective only	B2	4.5
106	Ash	200 #	10.5m	1 #	2 #	4	3 #		6	5.5	Semi Mature	Average	Indifferent	Supressed by T107 Appears self-set Inaccessible, offsite within neighbouring domestic garden, unable to thoroughly inspect Readily replaceable at current size, low arboricultural value	C12	2.4
107	Silver Birch	500 #	16m	7 #	6.5 #	7	7 #		4 #	3.5	Mature	Average	Indifferent	Structure appears typical for species within current context Maintains single leader for majority of height Minor internal deadwood Well balanced radial crown Inaccessible, offsite within neighbouring domestic garden, unable to thoroughly inspect Considered to be of moderate arboricultural quality	B12	6
108	English Oak	1250	25m	14 #	12	11	8 #		4.5	3.25	Mature	Average	Indifferent	Principal component of sites northern boundary Large fully occluded wound to east at c.4.5m Average internal deadwood Minor epicormic growth Mutually supressed and cohesive with T109 forming one single canopy Defines boundary with adjacent residential land Prominent within views from surrounding dwellings Good example of species at maturity	A12	15

Tree Number	Common Species Name	Trunk Diameter (mm)	Height (m)	Crown Spread (m) N	E	S	W	Radial	First Significant Branch (m)	Crown Clearance (m)	Life Stage	Physiological Condition	Structural Condition	Comments	BS5837 Category	RPA Radius (m)
109	English Oak	990 #	22m	11 #	5	11	12 #		5.25	4	Mature	Average	Indifferent	Dominant component of sites northern boundary Large pruning wound to south at c.4.25m Average internal deadwood Clad and obscured by dead Ivy Stem inaccessible due to dense understory Mutually supressed and cohesive with T108 forming one single canopy Defines boundary with adjacent residential land Prominent within views from surrounding dwellings	A2	12
110	English Oak	750	13m	3 #	4.75	2.5	2 #		4.5	6.25	Mature	Dead	Hazardous	Standing deadwood	U	N/A
111	Holly	300 #	12m	4 #	4 #	4	4 #		4 #	3	Early Mature	Average	Poor	Included primary union at c.3m Inaccessible, offsite within neighbouring domestic garden, unable to thoroughly inspect Low arboricultural quality	C12	3.6
112	Cherry	505	12.5m	10 #	6.25	2.75	3 #		7.25	4	Mature	Average	Poor	Heavily supressed by T113, biased to north Unsympathetic lower limb removals Defines boundary with adjacent residential land Unremarkable example of species	C1	6
113	English Oak	825 730	25m	12 #	10	11	11 #		4.25	3.5	Mature	Average	Poor	Co-dominant stems from ground level, union included to c.1.25m Average internal deadwood with occasional large diameter Above average minor epicormic growth on scaffold structure Well balanced radial crown Defines boundary with adjacent residential land Visually prominent individual	A2	13.2
114	Cherry	610	15m	0	2.25	10.75	7 #		3.5	5	Mature	Below Average	Hazardous	Significant cavity from ground level to c.4.5m with significant lean to south Hazardous structural condition, unsuitable for retention	U	N/A
115	Ash	250 #	10m	2 #	2 #	2	2 #		3 #		Semi Mature	Average	Indifferent	Appears self-set Inaccessible, offsite within neighbouring domestic garden, unable to thoroughly inspect Low arboricultural value	C12	3
116	Field Maple	380 #	11.5m	5 #	5.25	5	5 #		3 #		Early Mature	Average	Poor	Signs of past unsympathetic crown reduction Clad and obscured by Ivy Inaccessible, offsite within neighbouring domestic garden, unable to thoroughly inspect Unremarkable example of species	C12	4.5
117	Ash													Offsite: Removed as of January 2025		

Tree Number	Common Species Name	Trunk Diameter (mm)	Height (m)	Crown Spread (m) N	E	S	W	Radial	First Significant Branch (m)	Crown Clearance (m)	Life Stage	Physiological Condition	Structural Condition	Comments	BS5837 Category	RPA Radius (m)
118	Laburnum													Offsite: Removed as of January 2025		
119	Laburnum													Offsite: Removed as of January 2025		
120	Hawthorn	290 180 #	8.5m	7 #	5.5	4	3 #		3	2.5	Early Mature	Average	Indifferent	Average small diameter internal deadwood Inaccessible, offsite within neighbouring domestic garden, unable to thoroughly inspect Considered to be of low arboricultural quality	C12	4.2
121	Hawthorn	200 4* 100 #	7.5m	2 #	3	4.25	3.5 #		2	2.5	Early Mature	Average	Indifferent	Average small diameter internal deadwood Inaccessible, offsite within neighbouring domestic garden, unable to thoroughly inspect Considered to be of low arboricultural quality	C12	3.3
122	English Oak	700 #	16.5m	9 #	8	5 #	7 #		6 #	6	Early Mature	Below Average	Indifferent	Inaccessible due to dense understory, unable to thoroughly inspect Partially clad and obscured by Ivy Slightly sparse crown for species Above average small diameter internal deadwood Contributes to screen of area to west Moderate value as component of linear collection lining sites western boundary	B2	8.4
123	English Oak	660	14m	4.5	6	8 #	11 #		5.25	6	Early Mature	Average	Indifferent	Stem kinks to west from ground level then corrects at c.1.5m Average internal deadwood with large diameter in lower crown Slightly sparse crown at time of survey Contributes to screen of area to west Moderate value as component of linear collection lining sites western boundary	B2	7.8
124	English Oak	840	18.5m	9.75	10.5	9 #	11 #		4	3.5	Mature	Average	Indifferent	Dominant component of field boundary collection Tear out wound to east at c.6m Average internal deadwood of occasional large diameter Minor storm damage within upper crown Contributes to screen of area to west Visually prominent individual Considered to be of high arboricultural value	A12	10.2
125	English Oak	1250 oi	18m	13	13.5	10 #	12 #		4	4.25	Mature	Average	Indifferent	Stand out component of field boundary collection Unsympathetic reduction to lower scaffold limb orientated to east at c.4m Partially clad and obscured by Ivy, unable to thoroughly inspect Slightly sparse upper crown Average internal deadwood of occasional large diameter Minor cavities between buttress flares Visually prominent individual Contributes to screen of area to west Good example of species at maturity	A12	15

Tree Number	Common Species Name	Trunk Diameter (mm)	Height (m)	Crown Spread (m)					First Significant Branch (m)	Crown Clearance (m)	Life Stage	Physiological Condition	Structural Condition	Comments	BS5837 Category	RPA Radius (m)
				N	E	S	W	Radial								
126	Field Maple	670 oi	13.5m	6.75	6.75	7 #	6 #		3	4	Mature	Below Average	Indifferent	Slightly supressed by T125 Clad and obscured by Ivy, unable to thoroughly inspect Average internal deadwood and epicormic growth Dieback to tips Slightly sparse crown at time of survey Contributes to screen of area to west Moderate example of species at maturity	B12	8.1
127	Ash	740 590 570 470 oi	25m	12.25	9.75	10 #	13 #		5.25	4	Mature	Below Average	Hazardous	Large cavity at base to west from past co-dominant stem failure Hazardous split forming within union of co-dominant stems to south, unsuitable for retention	U	N/A
128	Ash	675	16.5m	3.25	11	13 #	6 #		6	4.25	Mature	Average	Indifferent	Unbalanced scaffold structure and crown, biased to south Average internal deadwood Slightly sparse crown for species Contributes to screen of area to west Moderate value as component of linear collection lining sites western boundary	B2	8.1
129	Hawthorn	285 185 oi	7m	2.75	5.25	3	0.5		2	3.5	Early Mature	Average	Indifferent	Established scrub Clad and obscured by Ivy Low arboricultural quality	C12	4.2
130	English Oak	590 oi	12.5m	10.25	4.25	0	6 #		2.75	2	Early Mature	Average	Hazardous	Precarious lean to north, appears to be hung up in companion shelter Hazardous structural condition, unsuitable for retention	U	N/A
131	English Oak	620 #	20m	8.75	8.75	9 #	8.5 #		5	4.25	Early Mature	Average	Indifferent	Minor epicormic growth Average internal deadwood Inaccessible due to dense understory, unable to thoroughly inspect Partially clad and obscured by Ivy Contributes to screen of area to west Moderate example of species whilst maturing	B12	7.5
132	Silver Birch	520	12m	5.25	5.5	7 #	6 #		2.5	6	Mature	Below Average	Poor	Large cavity to north from c.0.75m - 1.75m Slightly sparse crown for species Reduced future potential	C12	6.3

Tree Number	Common Species Name	Trunk Diameter (mm)	Height (m)	Crown Spread (m)					First Significant Branch (m)	Crown Clearance (m)	Life Stage	Physiological Condition	Structural Condition	Comments	BS5837 Category	RPA Radius (m)
				N	E	S	W	Radial								
133	English Oak	1045	26m	8.75	8.5	9 #	10 #		4.5	4	Mature	Average	Indifferent	Dominant component of field boundary collection Well balanced radial crown and scaffold structure Average internal deadwood Mutually supressed and cohesive with companion shelter Contributes to screen of area to west Visually prominent individual Good example of species at maturity	A12	12.6
134	English Oak	810 oi	25m	5.25	11	5 #	12 #		5.25	3.5	Mature	Average	Indifferent	Clad and obscured by Ivy, unable to thoroughly inspect Average internal deadwood of large diameter in lower crown Minor storm damage in upper crown Mutually supressed and cohesive with T135 Contributes to screen of area to west High value as prominent pair with T135	A2	9.6
135	English Oak	800 oi	23m	9.25	10.25	5 #	9 #		5.5	4	Mature	Average	Indifferent	Clad and obscured by Ivy, unable to thoroughly inspect Average internal deadwood of large diameter in lower crown Minor storm damage in upper crown Mutually supressed and cohesive with T135 Contributes to screen of area to west High value as prominent pair with T135	A2	9.6
136	English Oak	1250 #	22m	12.25	12.75	13 #	14 #		5.25	3.25	Mature	Average	Indifferent	Principal component of field boundary collection Inaccessible, appears outside of sites boundary, unable to thoroughly inspect Large failed scaffold limb still attached to south at c.3.5 Structure appears typical for species within current context Minor epicormic growth on lower stem Average internal deadwood with occasional large diameter Mutually supressed and cohesive with companion shelter Considered to be of high arboricultural quality	A12	15
137	Hazel	6* 120	8.5m	5.25	6	3 #	2 #		1	1	Early Mature	Average	Hazardous	Several stem failures from ground level, currently hung up in companion shelter Hazardous structural condition, unsuitable for retention	U	N/A
138	Scots Pine	720 #	16.5m	5.75	5	5 #	6 #		7 #	6.5	Mature	Average	Indifferent	Inaccessible, offsite within neighbouring third party land, unable to thoroughly inspect Bifurcates at c.3.5m, union appears tight but sound Partially clad and obscured by Ivy Average internal deadwood with large diameter in lower crown Considered to be of moderate arboricultural quality	B12	8.7

Tree Number	Common Species Name	Trunk Diameter (mm)	Height (m)	Crown Spread (m) N	E	S	W	Radial	First Significant Branch (m)	Crown Clearance (m)	Life Stage	Physiological Condition	Structural Condition	Comments	BS5837 Category	RPA Radius (m)
139	Scots Pine	630 #	17.5m	3.75	5.5	6 #	5 #		4.75	6.5	Mature	Average	Indifferent	Inaccessible, offsite within neighbouring third party land, unable to thoroughly inspect Structure appears typical for species within current context Partially clad and obscured by Ivy Average internal deadwood of large diameter in lower crown Considered to be of moderate arboricultural quality	B12	7.5
140	Elder	105 90	6m	3.5	4.25	1.25	1.5		1.5	1.5	Semi Mature	Average	Indifferent	Self-set specimen Readily replaceable at current size, low arboricultural value	C12	1.8
141	Elder	2* 110 #	7m	3.75	2.75	1	2		15	1.25	Semi Mature	Average	Indifferent	Self-set specimen Readily replaceable at current size, low arboricultural value	C12	1.8
142	English Oak	1000 #	21m	11.25	9.75	11 #	13 #		7 #	9 #	Mature	Average	Indifferent	Average internal deadwood of large diameter in lower crown Minor epicormic growth Cohesive with companions Structure appears typical for species within current context Partially clad and obscured by Ivy Inaccessible, offsite within neighbouring third party land, unable to thoroughly inspect Good example species at maturity	A12	12
143	Silver Birch	405 oi	16m	6	4.25	3	3.5		7.5	9	Early Mature	Below Average	Indifferent	Extensive deadwood within canopy Birch polypore present throughout scaffold	U	n/a
144	English Oak	700	22m	11.25	10 #	11 #	9.5		5.25	4	Early Mature	Average	Indifferent	Stand out component of collection lining sites southern boundary Well balanced radial crown Average internal deadwood Visually prominent individual Good example of species whilst maturing	A12	8.4
145	Hawthorn	220 200 oi	8.5m	6.25	3	1	3.25		4	3.25	Early Mature	Average	Indifferent	Established scrub Clad and obscured by Ivy Low arboricultural quality	C12	3.6
146	Cherry	335	12m	4.75	4.25	3.75	4		3.5	4.25	Early Mature	Average	Indifferent	Average small diameter internal deadwood Well balanced radial crown Structure typical for species within current context Moderate example of species whilst maturing	B1	3.9

Tree Number	Common Species Name	Trunk Diameter (mm)	Height (m)	Crown Spread (m) N	E	S	W	Radial	First Significant Branch (m)	Crown Clearance (m)	Life Stage	Physiological Condition	Structural Condition	Comments	BS5837 Category	RPA Radius (m)
147	Alder	3* 280 #	14.5m	6	5.25	4	5		2.75	3.25	Early Mature	Average	Poor	Multi stemmed from ground level Inaccessible due to dense understory, unable to thoroughly inspect Clad and obscured by Ivy Average small diameter internal deadwood Moderate value as component of wider collective	B2	5.7
148	Sycamore	380 #	11m	3.5	4	3.75	6.5		1.5	4.25	Early Mature	Below Average	Poor	Large cavity at c.2m Inaccessible due to dense understory Entering a state of decline, reduced future potential	C12	4.5
149	English Oak	1000 #	25m	12.25	12.75	1.75	10.5		4	4.25	Mature	Average	Poor	Unbalanced scaffold structure and crown, biased to north Stem inaccessible due to dense understory, unable to thoroughly inspect Significant wound on south side of stem from previous co-dominant stem failure Average internal deadwood Prominent boundary feature	B2	12
150	English Oak	600 #	16.5m	8.75	8.5	8 #	8		3.5	3	Early Mature	Average	Indifferent	Average internal deadwood Clad and obscured by Ivy, unable to thoroughly inspect Inaccessible due to dense understory Minor epicormic growth Well balanced radial crown Structure appears typical for species within current context Considered to be of moderate arboricultural value	B12	7.2
151	English Oak	315	15m	6.5	4.25	1	4		4.75	3	Early Mature	Average	Indifferent	Partially clad and obscured by Ivy, unable to thoroughly inspect Slightly supressed by T152 Average small diameter internal deadwood Individually of low significance, moderate value as component of internal field boundary collection	B2	3.9
152	English Oak	520	22m	6.75	4.75	6 #	7.25		6	5.5	Early Mature	Average	Indifferent	Maintains single leader for majority of height Average small diameter internal deadwood Cohesive with companions Structure typical for species within current context Moderate example of species whilst maturing	B12	6.3
153	English Oak	600 oi	20m	5	5.75	6.5	4.25		8.5	11 #	Early Mature	Average	Indifferent	Cohesive with companions Average internal deadwood Minor epicormic growth Partially clad and obscured by Ivy, unable to thoroughly inspect Moderate example of species whilst maturing	B12	7.2
154	Magnolia	115 110 95 85	5.5m	3.25	1.5 #	3.25	3.75		1.5	1.75	Semi Mature	Average	Poor	Tight primary union from ground level Readily replaceable at current size, low arboricultural value	C12	2.4

Tree Number	Common Species Name	Trunk Diameter (mm)	Height (m)	Crown Spread (m) N	E	S	W	Radial	First Significant Branch (m)	Crown Clearance (m)	Life Stage	Physiological Condition	Structural Condition	Comments	BS5837 Category	RPA Radius (m)
155	Holly	2* 230 #	8m	2.25	2	2.25	2 #		0.25	0.25	Early Mature	Average	Poor	Maintained ornamental shrub Stem inaccessible due to dense lower crown Tight primary union from ground level Low arboricultural quality	C12	3.9
156	Buddleia													Removed as of January 2025		
157	English Oak	585	11m	4.25	5.25	5 #	6 #		3.75	1	Early Mature	Average	Indifferent	Bifurcates at c.4m, union appears tight but sound Signs of management from previous heavy crown reduction Minor internal deadwood Considered to be of low arboricultural quality	C12	6.9
158	English Oak	480	6.5m					0.5	0	0	Early Mature	Below Average	Poor	Recent removal of entire scaffold structure and topped at c.6.5m Unremarkable example of species	C12	5.7
159	English Oak	250	6.5m					0.5	0	0	Semi Mature	Below Average	Poor	Recent removal of entire scaffold structure and topped at c.6.5m Unremarkable example of species	C12	3
160	English Oak	525 250	6.5m					1	0	0	Early Mature	Below Average	Poor	Recent removal of entire scaffold structure and topped at c.6.5m Unremarkable example of species	C12	6.9
161	English Oak	180	6.5m	1.25	5	4.25	2		4	3.5	Semi Mature	Below Average	Poor	Self-set specimen Supressed by T162 Readily replaceable at current size, low arboricultural value	C12	2.1
162	Beech	795	17m	4.5	6.25	8.25	10 #		4.5	4	Mature	Average	Poor	Significant cavity with signs of active decay to east at c.6.5m Large dead stubs on lower stem from previous unsympathetic pruning Signs of past management from previous reduction works Large pruning wound to west at c.3m Stem slightly leans to west Reduced future potential	C1	9.6
163	Sweet Chestnut	395	16.5m	5.75	5.5	0	0		4.75	2.5	Early Mature	Below Average	Indifferent	Unbalanced scaffold structure and crown, biased to north east Above average epicormic growth Slightly sparse crown at time of survey Unremarkable example of species	C1	4.8

Tree Number	Common Species Name	Trunk Diameter (mm)	Height (m)	Crown Spread (m) N	E	S	W	Radial	First Significant Branch (m)	Crown Clearance (m)	Life Stage	Physiological Condition	Structural Condition	Comments	BS5837 Category	RPA Radius (m)
164	English Oak	625 #	16m	7 #	6.25	7 #	8 #		7 #	5 #	Early Mature	Average	Indifferent	Inaccessible, appears outside of sites boundary, unable to thoroughly inspect Structure appears typical for species within current context Average internal deadwood Moderate example of species whilst maturing	B12	7.5
165	Beech	650	17.5m	8.25	8.25	8.5	9 #		2.25	3.75	Early Mature	Average	Indifferent	Lower stem obscured by Ivy, unable to thoroughly inspect Well balanced radial crown Average small diameter internal deadwood Cohesive with companions Prominent within views from adjacent road Moderate example of species whilst maturing	B12	7.8
166	English Oak	660	19m	9.5	3.75	0	7.5		7	7 #	Early Mature	Below Average	Indifferent	Unbalanced scaffold structure and crown, biased to north Lower stem clad obscured by Ivy, unable to thoroughly inspect Slightly sparse crown for species Average internal deadwood Cohesive with companions Prominent within views from adjacent road	B2	7.8
167	Beech	575	16.5m	9.5	7.25	5.5	5.75		5.75	3.25	Early Mature	Average	Poor	Unsympathetic removal of co-dominant stem orientated to south at c.1.3m Several pruning wounds on lower stem Tarmac surface within RPA to south and east Partially clad and obscured by Ivy, unable to thoroughly inspect Considered to be of low arboricultural quality	C1	6.9
168	Japanese Maple	3* 60 5* 40	4m	2.75	2.5 #	3.5	3.5		0.5	1	Semi Mature	Average	Indifferent	Multi stemmed from ground level Readily replaceable at current size, low arboricultural value	C12	1.5
169	Red Horse Chestnut	605	13.5m	7 #	8.25	6.25	7.25		3	1.5	Mature	Average	Indifferent	Established planting within roadside verge Cohesive with T170 Previous lower limb removals to crown lift Average internal deadwood Structure typical for species within current context Prominent within views from adjacent road and surrounding built form	B2	7.2
170	Red Horse Chestnut	480	13m	5.75	7	6.25	6.25		3.25	1.5	Early Mature	Average	Indifferent	Established planting within roadside verge Cohesive with T169 Previous lower limb removals to crown lift Average internal deadwood Structure typical for species within current context Prominent within views from adjacent road and surrounding built form	B2	5.7
171	Box	110	2m					1	0.5	0.5	Semi Mature	Average	Indifferent	Closely trimmed ornamental Box	C12	1.2

Tree Number	Common Species Name	Trunk Diameter (mm)	Height (m)	Crown Spread (m) N	E	S	W	Radial	First Significant Branch (m)	Crown Clearance (m)	Life Stage	Physiological Condition	Structural Condition	Comments	BS5837 Category	RPA Radius (m)
172	Yew	180#	5m					3.25	2	1.75	Early Mature	Average	Indifferent	Offsite Establishing ornamnetal planting within less well established group Radilly distirbuted canopy	C12	2.1
173	Turkey Oak	1200#	22m	11.25	10	10#	9.25		3	5	Mature	Average	Moderate	Offsite within adjacent garden Previously crown lifed over verge; large pruning wound at c.2m to north Previosuly reduced Average deadwood Slightly above average epicormic growth	A2	14.4
174	Beech	280#	15m					5	4	5	Early Mature	Average	Poor	Offsite within adjacent garden Suppressed by T175	C12	3.3
175	Beech	450#	16m					5.25	3	5	Early Mature	Average	Indifferent	Offsite within adjacent garden Forms cohesive canopy with T176 either side of driveway Of moderate arboricultural quality	B2	5.4
176	English Oak	700#	15m					6	5	6	Mature	Average	Poor	Offsite within adjacent garden Previously reduced and crown lifted Burred stem Above average epicormic growth Forms cohesive canopy with T175 either side of driveway	B2	8.4
177	Hawthorn	4 x 90	7m					2.75	2	2	Early Mature	Average	Indifferent	Offsite within adjacent garden Single bole, forking at c.1m Dense Ivy coverage	C12	2.1
178	English Oak	1000#	16m					7.5	5	6	Mature	Average	Poor	Offsite within adjacent garden Previously reduced and crown lifted Burred stem Above average epicormic growth	B2	12
179	English Oak	700#	6m					0	n/a	n/a	Early Mature	Dead	Poor	Ivy covered monolith	U	n/a
180	English Oak	1290	22m	8.75	10	9.5	9		2.5	6.5	Mature	Average	Indifferent	Street tree on green to north Large Ganoderma bracket to West at c.1m Large lateral roots to north and south Previously reduced Epicormic growth previously removed Large lateral limb removed to west at c.2.5m; wet rot hole within partially occluded wound	A12	15
181	Holly	250 120 160	8m	4	3.25	2.75	4		2.75	1.75	Early Mature	Average	Indifferent	Street tree on green to north Multi stemmed from base previosusy crown lifted	C12	3.9
182	English Oak	1030	22m	7	11	10	9.5		5	2.5	Mature	Average	Moderate	Street tree on green to north Basal morphology appears to be located on edge of former ditch Large lateral roots to East and West Previously Crown Lifted and reduced	A2	12.3
183	Sweet Chestnut	570	14m	5.75	4.5	5.5	7.25		3.5	4.5	Early Mature	Average	Poor	Street tree on verge to north Kinked stem Bark necrosis to east, form ground level to c.1m Previously crown lifted Individually low quality	B2	6.9
184	Sweet Chestnut	7 x40 1x 60	6m					1.5	0.5	0.5	Young	Average	Indifferent	Felled Sweet Chestnut Young regrowth present	C12	1.5

Tree Number	Common Species Name	Trunk Diameter (mm)	Height (m)	Crown Spread (m) N	E	S	W	Radial	First Significant Branch (m)	Crown Clearance (m)	Life Stage	Physiological Condition	Structural Condition	Comments	BS5837 Category	RPA Radius (m)
185	Sweet Chestnut	1260	10m	6	5.75	7.25	6		2.5	5	Veteran	Average	Poor	Street tree on verge to north Veteran example of species: Large stem girth Previously crown lifted - wound to east filled with concrete Significant decay in scaffold Laurel growing from union at c.3m Significant reduction works previously	A123	15 RPA 18.9 VTB
186	Sycamore	320 290 320	15m	4.5#	4	3.5	4.5		3.5	2	Early Mature	Average	Poor	Self set street tree on verge to north Three stemmed from base Previously crown lifted over footpath	C12	6.3
187	Holly	4 x 280#	10m					3.25	4	3.5	Mature	Average	Poor	Set within trimmed hedge Extremely dense Ivy coverage Hawthorn growing through canopy Sparse canopy Low quality	C12	6.6
G1	Hazel English Oak Hawthorn Silver Birch Goat Willow	100 # max	4m av					2 av	1 av	1 av	Young to Semi Mature	Average	Indifferent	Intermittent scrub group with frequent self-set specimens Inaccessible, offsite within neighbouring third party land Provides understory for T1 - T12 Readily replaceable at current size, low arboricultural value	C12	1.2
G2	Cherry Laurel Hazel Hawthorn Blackthorn	80 av	5m max					2.5 av	1 av	1 av	Young to Semi Mature	Average	Indifferent	Unmanaged parcel of colonised scrub and Cherry Laurel Provides understory for T13 - T15 Readily replaceable at current size, low arboricultural value	C12	0.9
G3	Silver Birch	120 # max	6m max					3 max	1.5 av	1.5 av	Young to Semi Mature	Average	Indifferent	Cohesive pair of readily replaceable plantings Inaccessible, offsite within neighbouring domestic garden, unable to thoroughly inspect Considered to be of low arboricultural value	C12	1.5
G4	Holly Hazel Hawthorn English Oak	5* 90 av	6m av					5 max	1 av	1 av	Young to Semi Mature	Average	Indifferent	Partially managed field boundary scrub group Lower canopies to western frontage maintained by flail Screens area to east Provides understory for T24 - T30 Considered to be of low arboricultural quality	C12	2.4
G5	Hazel Hawthorn Holly Guelder Rose	4* 100 av	10m max					5 av	1 av	1 to 4.5	Semi Mature to Early Mature	Average	Poor to Indifferent	Unmanaged scrub group situated on embankment to north of adjacent water course Provides understory for T31 Low arboricultural quality	C12	2.4
G6	Alder Ash Crack Willow English Oak Hazel Sycamore Hawthorn Holly	500 3* 275 4* 150 av	19m max 13.5m av					6.75 av 9.75 max	1 to 13	1 to 15	Young to Mature	Below Average to Average	Poor to Indifferent	Cohesive collection of predominantly multi stemmed Alder situated on embankments of water course Structures appear typical for species within current context Provides dense screen of area to south Occasional Sycamore, Ash and English Oak occurring throughout Considered to be of moderate arboricultural value	B12	8.1

Tree Number	Common Species Name	Trunk Diameter (mm)	Height (m)	Crown Spread (m) N	E	S	W	Radial	First Significant Branch (m)	Crown Clearance (m)	Life Stage	Physiological Condition	Structural Condition	Comments	BS5837 Category	RPA Radius (m)
G7	Hawthorn Elder Holly	2* 100 av	6m av					2.75 av	1 av	1 av	Young to Semi Mature	Average	Indifferent	Small parcel of colonised scrub Considered to be of low arboricultural value	C12	1.8
G8	Yew Holly Hawthorn Hazel Sycamore Ash English Oak Field Maple Blackthorn	180 2* 100 3* 60 av	6m av					3.25 av	1 av	1 av	Young to Semi Mature	Below Average to Average	Poor to Indifferent	Understory scrub group majoring on Hawthorn, Hazel and Holly Provides screen of bridle way to east Frequent young self-set specimen occurring throughout Considered to be of low arboricultural quality	C12	2.7
G9	Sycamore Silver Birch Cherry Holly Hawthorn	300 # max	12m max					5 max	1 to 6 #	1 to 8 #	Semi Mature to Early Mature	Average	Indifferent	Cohesive collection of established ornamental plantings Inaccessible, offsite within neighbouring domestic garden Provides screen of dwelling to north Structures appear typical for species within current context Individually of low significance, moderate value as collective only	B2	3.6
G10	Blackthorn Hazel Holly Hawthorn Elder Field Maple English Oak Ash	200 3* 100 av	7m av					4 av	1 av	1 av	Young to Early Mature	Below Average to Average	Poor to Indifferent	Unmanaged field boundary scrub group Defines boundary with adjacent third party land Contributes to screen of area to west Provides understory for T122 - T139 Considered to be of low arboricultural quality	C12	3.3
G11	Holly Hazel Hawthorn Sycamore Elder Alder English Oak Silver Birch	200 2* 140 3* 75 av	6.5m av					3.5 av	1 av	1 av	Young to Early Mature	Below Average to Average	Poor to Indifferent	Partially managed field boundary scrub group Lower canopies to northern frontage maintained by flail Occasional self-set specimen occurring throughout Contributes to screen of area to south Provides understory for T143 - T153 Considered to be of low arboricultural quality	C12	3.6
G12	Alder Silver Birch English Oak Sycamore Cherry Field Maple Hawthorn Blackthorn Elder	580 2* 300 av	23m max					6.75 av	1 to 14 #	1 to 16 #	Semi Mature to Mature	Below Average to Average	Poor to Indifferent	Cohesive collection of predominantly multi stemmed Alder situated on embankments of water course Structures appear typical for species within current context Provides dense screen of area to south Occasional fallen and standing deadwood occurring throughout Considered to be of moderate arboricultural value	B12	8.7

Tree Number	Common Species Name	Trunk Diameter (mm)	Height (m)	Crown Spread (m) N	E	S	W	Radial	First Significant Branch (m)	Crown Clearance (m)	Life Stage	Physiological Condition	Structural Condition	Comments	BS5837 Category	RPA Radius (m)
G13	Privet Photinia	80 # av	4m av					2.25 av	1 # av	1.5 av	Semi Mature	Average	Indifferent	Inaccessible, offsite within neighbouring domestic garden Cohesive collection of maintained ornamental shrubs Readily replaceable at current size, low arboricultural value	C12	0.9
G14	Hazel Variegated Holly Lilac Magnolia Cherry Laurel	80 av	3m av					1.75 av	0.5 av	0.5 av	Semi Mature	Average	Indifferent	Small intermittent parcels of maintained ornamental shrubs Readily replaceable at current size, low arboricultural value	C12	0.9
G15	Lawson Cypress	290 av	10m max					2.75 max	1 to 3	1 to 2	Semi Mature to Early Mature	Average	Indifferent	Short cohesive boundary line of unremarkable Lawson Cypress Previously topped at c.3.5m Considered to be of low arboricultural quality	C12	3.6
G16	Silver Birch Yew English Oak Photinia Hawthorn Holly	100 av	5m max					1.75 av	0.5 to 2	0.5 to 1.5	Young to Semi Mature	Average	Indifferent	Intermittent boundary collection of maintained ornamental shrubs and plantings Provides partial screen of area to west Readily replaceable at current size, low arboricultural value	C12	1.2
G17	Magnolia Rhododendron Laburnum Rose	60 av	2m av					1 av	0.25 av	0.25 av	Semi Mature	Average	Indifferent	Small intermittent parcels of maintained ornamental shrubs Readily replaceable at current size, low arboricultural value	C12	0.9
G18	Leyland Cypress Portugal Laurel Hazel	80	6.5 max.					1.5	1	1	Semi Mature	Average	Indifferent	Establising ornamentla plantings straddling boundary Structure typical Swamped by Bamboo	C12	0.9
G19	Magnolia Goat Willow	2 X 250#	7.5 max.	4	4#	4	1.25		1.75	2.5	Early Mature	Average	Indifferent	c.1m offsite Both twin stemmed from base Oversailing canopy trimmed to boundary	C12	4.2
G20	Holly Rhododendron Hazel	4 x 70 # max	5.5 max.					1.75	1.75	1.75	Semi Mature	Average	Indifferent	Offsite Establihsing ornamental plantings Oversailing canopies trimmed to boundary	C12	1.8
G21	Hazel Holly Hawthorn	3 x 160 3 x 120 max.	7m					3.25	3	3	Early Mature	Average	Indifferent	Offsite - set within neighbouring garden Crown lifted over verge Below BS Laurel and Western Red Cedar form u/s	C12	4.2
H1	Hawthorn Holly	75 av	1.5m av					1.25 av	0.25 av	0.25 av	Semi Mature	Average	Indifferent	Intermittent internal field boundary hedgerow Provides understory for T35 - T40	C12	0.9
H2	Holly Hawthorn Blackthorn Hazel	80 av	5m av					2.5 av	0.25 av	0.25 av	Semi Mature	Average	Indifferent	Partially managed internal field boundary hedgerow, maintained on lower canopies only Provides understory for T41 - T49	C12	0.9

Tree Number	Common Species Name	Trunk Diameter (mm)	Height (m)	Crown Spread (m) N	E	S	W	Radial	First Significant Branch (m)	Crown Clearance (m)	Life Stage	Physiological Condition	Structural Condition	Comments	BS5837 Category	RPA Radius (m)
H3	Hawthorn Hazel Holly	80 av	1.5m av					1 av	0.25 av	0.25 av	Semi Mature	Average	Indifferent	Maintained field boundary hedgerow Provides low level screen of adjacent bridle way	C12	0.9
H4	Holly Hazel Hawthorn	80 av	1.5m av					1.75 av	0.25 av	0.25 av	Semi Mature	Average	Indifferent	Maintained field boundary hedgerow	C12	0.9
H5	Hawthorn Holly	75 av	1.5m av					1 av	0.25 av	0.25 av	Semi Mature	Average	Indifferent	Maintained native hedgerow Defines boundary with neighbouring residential land	C12	0.9
H6	Holly Lawson Cypress	60 av	1.5m av					1 av	0.25 av	0.25 av	Semi Mature	Average	Indifferent	Maintained domestic hedgerow Defines boundary with neighbouring residential land	C12	0.9
H7	Holly Lawson Cypress Elder Hazel Apple	75 av	1.5m av 6 max.					1 av	0.25 av	0.25 av	Semi Mature	Average	Indifferent	Maintained domestic hedgerow Defines boundary with neighbouring residential land	C12	0.9
H8	Western Red Cedar Yew Hazel Leyland Cypress Blackthorn	100 av	3.5m av					1.25 av	0.25 av	0.25 av	Semi Mature	Average	Indifferent	Maintained domestic hedgerow Provides low level screen of adjacent dwellings	C12	1.2
H9	Laurel Holly Beech	110 max.	2.5 - 4					0.5	0.25	0.25	Early Mature	Average	Indifferent	Maintained domestic hedge Top not trimmed at northern extent	C12	1.2
H10	Hazel Holly Privet	50 max.	3m					0.5	0.25	0.25	Semi Mature	Average	Indifferent	Closely trimmed domestic hedge	C12	0.9
H11	Pyracantha Holly Privet Viburnum Berbaris	3 x 40 max.	3m					1	0.5	0.5	Early Mature	Average	Indifferent	Closely trimmed domestic hedge	C12	0.9
H12	Holly Hawthorn Hazel	5x50 max.	2m					0.5	0.25	0.25	Semi Mature	Average	Indifferent	Closely trimmed domestic hedge	C12	1.2

APPENDIX E

TREE PROTECTION BARRIER SPECIFICATION

Recommended Tree Protection Fencing Specification for this Development

(Source: BS 5837: 2012)

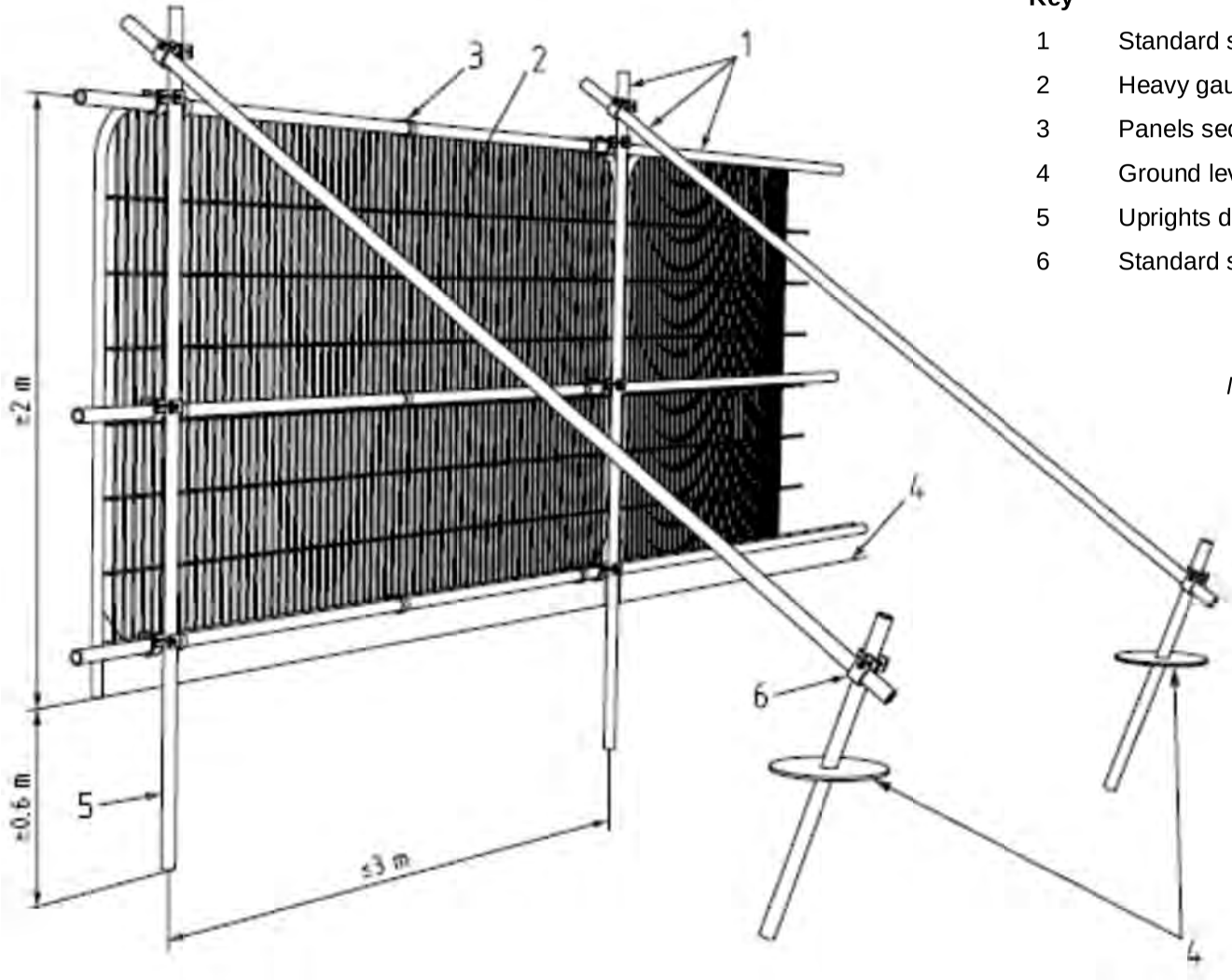

Key

1	Standard scaffold poles
2	Heavy gauge 2m tall galvanized tube and welded mesh infill panels
3	Panels secured to uprights and cross-members with wire ties
4	Ground level
5	Uprights driven into the ground until secure (minimum depth 0.6m)
6	Standard scaffold clamps

Notes:

- *Supports are to be sited tree side of the panel front face.*
- *All weather notices should be attached to every fourth panel highlighting the importance of the barrier in its correct position. An example is provided overleaf which may be duplicated for use on this development.*

aspect arboriculture

Tree Protection Barrier Specification

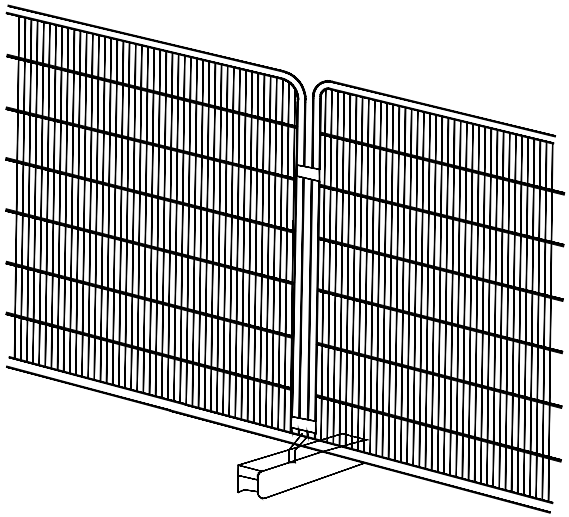

Heras panels supported with pinned rubber feet and driven 100x100mm timber posts on every second panel.

aspect arboriculture

TREE PROTECTION BARRIER

- **DO NOT MOVE THIS FENCE**
- **NO SITE ACTIVITY TREE SIDE OF FENCE**
- **NO STORAGE TREE SIDE OF FENCE**

- **For assistance call Aspect Arboriculture: 01295 276066**

aspect arboriculture

landscape planning • ecology • arboriculture

aspect

Aspect Arboriculture Ltd
South Court
Hardwick Business Park
Noral Way
Banbury
Oxfordshire OX16 2AF

T: 01295 276066
F: 01295 265072
E: info@aspect-arbor.com
W: www.aspect-arbor.com