From: Emily Wade <Emily.Wade@midsussex.gov.uk>
Sent: 30 March 2026 16:25:03 UTC+01:00
To: "Rachel Richardson" <Rachel.Richardson@midsussex.gov.uk>
Subject: DM/26/0318 6 St Christophers Road, HPP

Hi Rachel

Comments on the above planning application.

The application site is an unlisted semi-detached house forming part of a development dating from the later 20th century that was constructed between Fairfield Crescent and Trinity Road, wrapping around the school playing fields. The site is not within the Hurstpierpoint Conservation Area, but is within its setting, as the boundary of the Area runs along the periphery of the rear garden. The house, and the development of which it is part, are not of any particular architectural merit and make at best a neutral contribution to the setting and significance of the Conservation Area.

The current proposal is for alterations and extensions to the house comprising partial demolition of an existing detached garage to the rear of the property, a single storey rear extension replacing on an enlarged footprint an existing small addition, and a loft conversion including rear box dormer and front rooflights.

The existing rear extension and garage are not of any particular interest, and their demolition or partial demolition is not considered contentious in principle.

The principle of a replacement rear extension on an enlarged footprint is also not considered contentious, but as shown the replacement addition is wider than the existing rear elevation of the house, extending beyond it to its northern side. This would contrary to the requirements of the District Council's adopted Design Guide in respect of an appropriate relationship of scale between the original building and additions to it, in particular Design Principle DG49 *'General Principles for Extensions'.* However, in terms of the impact on the setting of the Conservation Area this aspect of the proposal will have only a minor effect, as the northern end of the extension would be partly hidden in views from the west by the retained portion of the garage. In my opinion, an objection on heritage grounds to this aspect of the proposal would therefore be difficult to sustain.

Although the principle of a loft conversion would not be considered contentious, and the rooflights to the front roofslope are not considered problematic subject to detail, the proposed box dormer rear addition, which would occupy the majority of the existing rear roof slope, is considered contentious both in terms of compliance with the Design Guide, and in terms of impact on the setting of the Conservation Area.

Design Principle DG52 *'Loft Conversions and Roof Extensions'* of the Design Guide notes that *'Roof accommodation is normally reliant on dormer windows and rooflights to*

provide light and ventilation. However, if they are out of scale or out of character with the roofscape and proportions of a dwelling they can have an adverse impact on the character of both the dwelling and the streetscape.' It further states that *'The roof pitch and form are intrinsic to a building's character and roof extensions should be sensitive to this. Roof extensions and dormer windows that alter the existing ridge of the roof or significantly alter the roof profile of a building will not normally be acceptable…'*

The figures to illustrate this point include 9H which shows a dormer which is less dominant within the roofslope than that proposed at 6 St Christopher's Road, but is considered unacceptable:

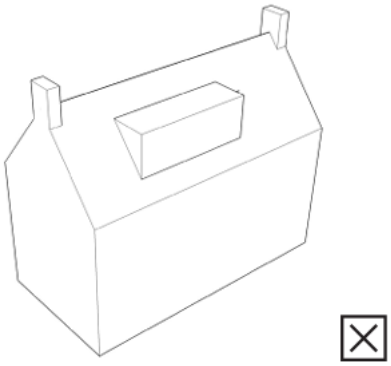

Figure 9H: Large flat roofed single dormer out of scale with the original dwelling

Sections 6.3.5-6.3.8 of this document also refer to dormer windows. 6.3.6. states that: *'Dormer windows should be visually subordinate to the roof slope, enabling a large proportion of the main roof to remain visible. Excessively wide dormers are likely to look unsatisfactory as they will often be out of proportion with the existing roof.'* The proposal fails to meet this requirement due to the excessive scale and bulk of the rear box dormer.

In my opinion, the scale and form of the proposed rear roof extension would result in addition which is over scaled and overly prominent, and which detracts from the appearance of the house, including views towards it from within the Hurstpierpoint Conservation Area, harming the contribution made by setting to the character and appearance of the Area.

For these reasons I would consider that the proposal in respect of the rear roof extension results in harm through impact on setting to the character and appearance of the Conservation Area, contrary to the requirements of District Plan Policy DP35. In terms of the NPPF, I would place the harm caused as falling within the less than substantial spectrum, at the lower end of that scale. The proposed extensions both at ground floor and at roof level are also both contrary to the requirements of the Council's adopted Design Guide.

Thanks,

Emily

Please note that this advice is given at Officer level only and is without prejudice to the formal decision of the District Council.

Submit your planning application online.
http://www.planningportal.gov.uk
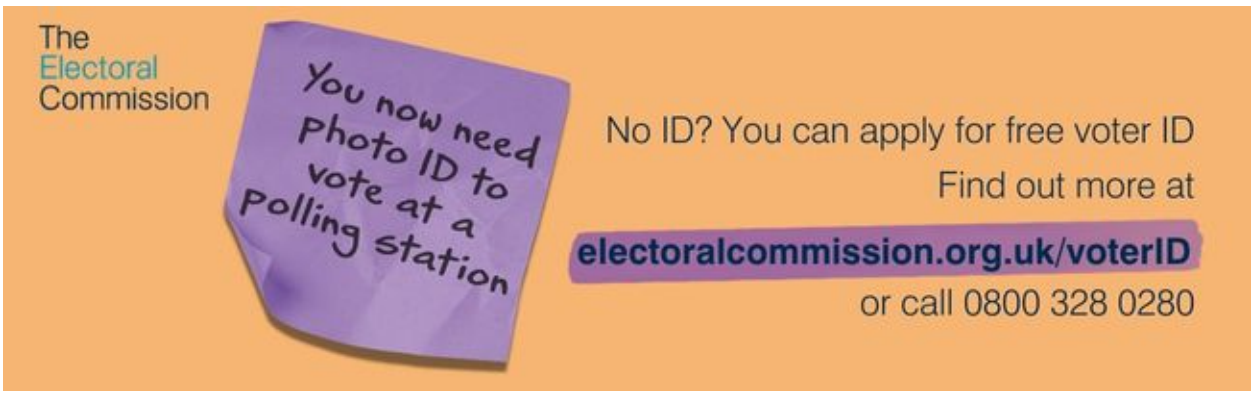
Emily Wade Ma MSc
Conservation Officer
Planning Services
Tel: +44 (0)1444 477385
emily.wade@midsussex.gov.uk http://www.midsussex.gov.uk